جامعة الفرات الاوسط التقنية / المعهد التقني- سماوة
قسم التقنيات الكهربائية

المحاضرة السابعة

اسم المادة / دوائر كهربائية

المرحلة الدراسية / الاولى

العام الدراسي / 2022 – 2023

استاذ المادة : بشائر مكي جبر

3.2 Norton's Theorem

Norton's theorem states the following:

An equivalent circuit consisting of a current source and a parallel resistor can replace any two-terminal linear bilateral dc network.

The discussion of Thévenin's theorem with respect to the equivalent circuit can also be applied to the Norton equivalent circuit. The steps leading to the proper values of I_N and R_N are now listed.

1. Remove that portion of the network across which the Norton equivalent circuit is found.
2. Mark the terminals of the remaining two-terminal network.

R_N:

3. Calculate R_N by first setting all sources to zero (voltage sources are replaced with short circuits, and current sources with open circuits) and then finding the resultant resistance between the two marked terminals. (If the internal resistance of the voltage and/or current sources is included in the original network, it must remain when the sources are set to zero.) Since $R_N = R_{Th}$, the procedure and value obtained using the approach described for Thévenin's theorem will determine the proper value of R_N.

I_N:

4. Calculate I_N by first returning all sources to their original position and then finding the short-circuit current between the marked terminals. It is the same current that would be measured by an ammeter placed between the marked terminals.

5. Draw the Norton equivalent circuit with the portion of the circuit previously removed replaced between the terminals of the equivalent circuit.

Example 3.4 Find the Norton equivalent circuit for the network in the shaded area of Fig. below ?

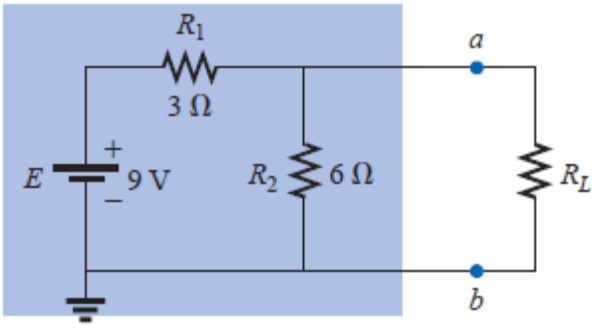

Solution:

1- R_N

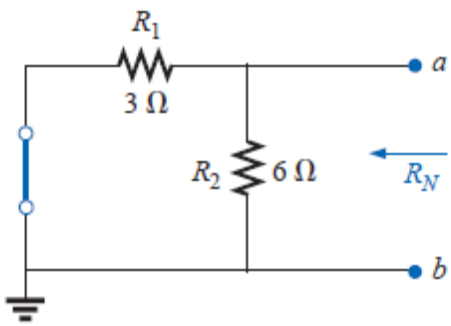

$$R_N = R_1 \parallel R_2 = 3\ \Omega \parallel 6\ \Omega = \frac{(3\ \Omega)(6\ \Omega)}{3\ \Omega + 6\ \Omega} = \frac{18\ \Omega}{9} = \mathbf{2\ \Omega}$$

2- I_N

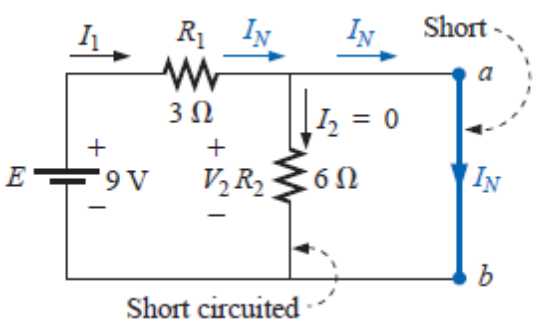

$$V_2 = I_2R_2 = (0)6\ \Omega = 0\ \text{V}$$

Therefore,

$$I_N = \frac{E}{R_1} = \frac{9\ \text{V}}{3\ \Omega} = \mathbf{3\ A}$$

3- Equivalent Circuit

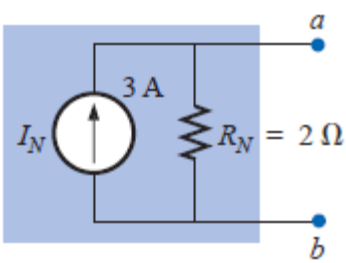

Example 3.5 Find the Norton equivalent circuit for the network external to the 9-Ω resistor in Fig. below ?

Solution

1- R_N

$$R_N = R_1 + R_2 = 5\ \Omega + 4\ \Omega = \mathbf{9\ \Omega}$$

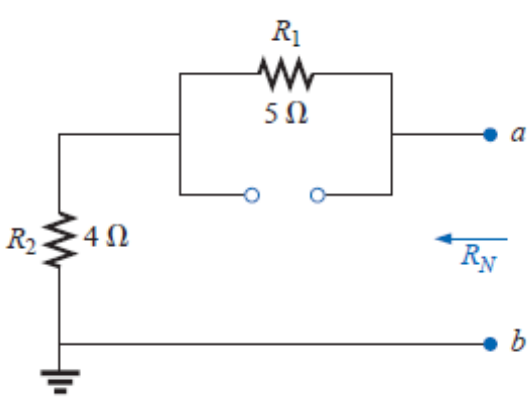

2- I_N

$$I_N = \frac{R_1 I}{R_1 + R_2} = \frac{(5\ \Omega)(10\ \text{A})}{5\ \Omega + 4\ \Omega} = \frac{50\ \text{A}}{9} = \mathbf{5.556\ A}$$

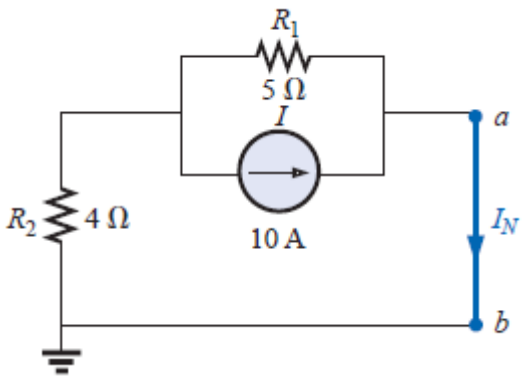

3- Equivalent Circuit

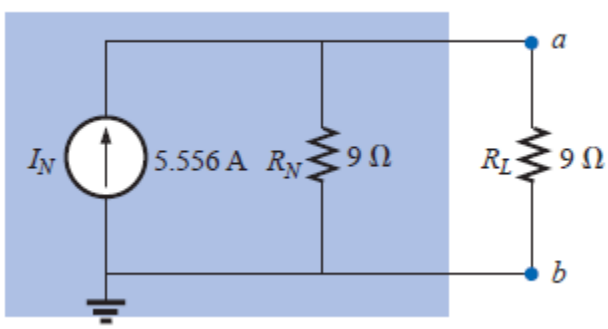

Example 3.6 (Two sources) Find the Norton equivalent circuit for the portion of the network to the left of *a-b* in Fig. below ??

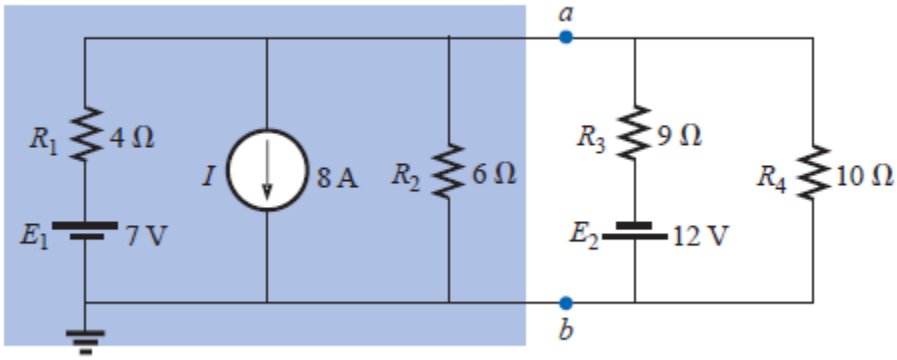

Solution:

1- R_N

$$R_N = R_1 \parallel R_2 = 4\ \Omega \parallel 6\ \Omega = \frac{(4\ \Omega)(6\ \Omega)}{4\ \Omega + 6\ \Omega} = \frac{24\ \Omega}{10} = \mathbf{2.4\ \Omega}$$

2- I_N

$$I'_N = \frac{E_1}{R_1} = \frac{7\text{ V}}{4\ \Omega} = 1.75\text{ A}$$

$$I''_N = I = 8\text{ A}$$

The result is

$$I_N = I''_N - I'_N = 8\text{ A} - 1.75\text{ A} = \mathbf{6.25\ A}$$

3- Equivalent Circuit

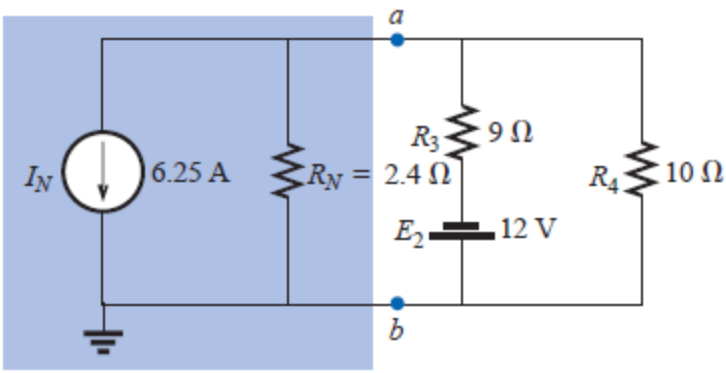
a
I_N
6.25 A
R_N = 2.4 Ω
R_3
9 Ω
E_2
12 V
R_4
10 Ω
b