جامعة الفرات الاوسط التقنية / المعهد التقني- سماوة
قسم التقنيات الكهربائية

المحاضرة الثانية

اسم المادة / دوائر كهربائية

المرحلة الدراسية / الاولى

العام الدراسي / 2022 – 2023

استاذ المادة : بشائر مكي جبر

Series and parallel resistance

Introduction

Chapter 1 introduced basic concepts such as current, voltage, and power in an electric circuit. To actually determine the values of these variables in a given circuit requires that we understand some fundamental laws that govern electric circuits. These laws, known as Ohm's law and Kirchhoff's laws, form the foundation upon which electric circuit analysis is built. In this chapter, in addition to these laws, we shall discuss some techniques commonly applied in circuit design and analysis. These techniques include combining resistors in series or parallel, voltage division, current division, and delta-to-wye and wye-to-delta transformations.

2.1 Ohm's Law

Georg Simon Ohm (1787–1854), a German physicist, is credited with finding the relationship between current and voltage for a resistor. This relationship is known as *Ohm's law*. Ohm's law states that the voltage v across a resistor is directly proportional to the current i flowing through the resistor.

That is,

$$v \propto i \qquad \textbf{2.1}$$

Ohm defined the constant of proportionality for a resistor to be the resistance, R. (The resistance is a material property which can change if the internal or external conditions of the element are altered, e.g., if there are changes in the temperature.) Thus, Eq. (2.1) becomes

$$\boxed{v = iR} \qquad \textbf{2.2}$$

Ohm defined the constant of proportionality for a resistor to be the resistance, R. (The resistance is a material property which can change if the internal or external conditions of the element are altered, e.g., if there are changes in the temperature.) Thus, Eq. (2.2) becomes which is the mathematical form of Ohm's law. R in Eq. (2.3) is measured in the unit of ohms, designated . Thus, The *resistance R* of an element denotes its ability to resist the flow of electric current; it is measured in ohms (**Ω**).

A short circuit is a circuit element with resistance approaching zero.

Series and parallel resistance

An open circuit is a circuit element with resistance approaching infinity.

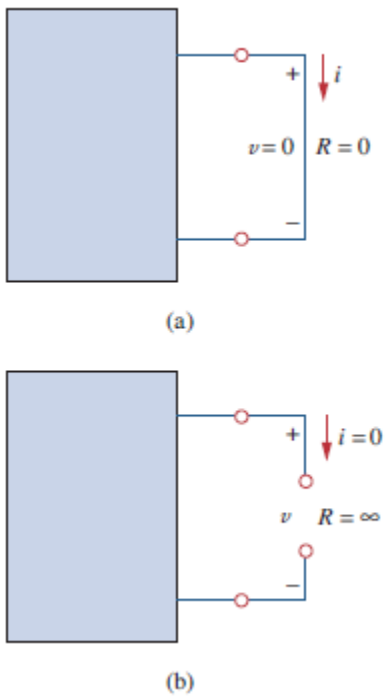

Figure 2.1
(a) Short circuit (R=0) , (b) Open circuit ($R = \infty$).

A useful quantity in circuit analysis is the reciprocal of resistance R, known as *conductance* and denoted by G:

$$\boxed{G = \frac{1}{R} = \frac{i}{v}} \qquad \textbf{(2.3)}$$

Conductance is the ability of an element to conduct electric current; it is measured in mhos (℧) or siemens (S).

Series and parallel resistance

$$i = Gv \qquad \textbf{(2.4)}$$

The power dissipated by a resistor can be expressed in terms of *R*.

$$p = vi = i^2R = \frac{v^2}{R} \quad \textbf{watts} \qquad \textbf{(2.5)}$$

The power dissipated by a resistor may also be expressed in terms of *G* as

$$p = vi = v^2G = \frac{i^2}{G} \quad \textbf{watts} \qquad \textbf{(2.6)}$$

The Power delivered from the source is

$$\boxed{P = EI} \qquad \text{(watts)} \qquad \textbf{(2.7)}$$

with *E* the battery terminal voltage and *I* the current through the source.

EXAMPLE 2.1 : Determine the current through a 5-kΩ resistor when the power dissipated by the element is 20 mW.

Solution:

$$I = \sqrt{\frac{P}{R}} = \sqrt{\frac{20 \times 10^{-3}\,\text{W}}{5 \times 10^{3}\,\Omega}} = \sqrt{4 \times 10^{-6}} = 2 \times 10^{-3}\,\text{A}$$
$$= \mathbf{2\ mA}$$

2.2 Series Circuits

A **circuit** consists of any number of elements joined at terminal points, providing at least one closed path through which charge can flow. The circuit of Fig. 2.2(a) has three elements joined at three terminal points (*a*, *b*, and *c*) to provide a closed path for the current *I*.

Series and parallel resistance

Two elements are in series if

1. They have only one terminal in common (i.e., one lead of one is connected to only one lead of the other).
2. The common point between the two elements is not connected to another current-carrying element.

(a) series circuit **(b) R1 and R2 not in series**

Figure 2.2

In general, to find the total resistance of *N* resistors in series, the following equation is applied:

$$R_T = R_1 + R_2 + R_3 + \cdots + R_N \quad \text{(ohms, } \Omega\text{)} \qquad \textbf{(2.8)}$$

The current drawn from the source can be determined using Ohm's law, as follows:

Series and parallel resistance

$$I_s = \frac{E}{R_T} \quad \text{(amperes, A)} \qquad \textbf{(2.9)}$$

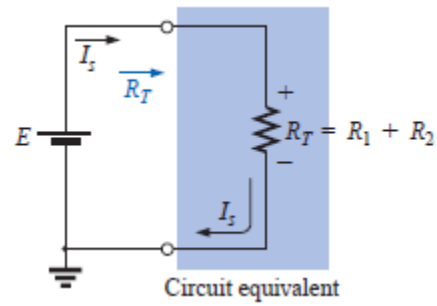

The fact that the current is the same through each element of Fig. 2.2 (a) permits a direct calculation of the voltage across each resistor using Ohm's law; that is,

$$V_1 = IR_1,\ V_2 = IR_2,\ V_3 = IR_3,\ \ldots,\ V_N = IR_N \quad \text{(volts, V)} \qquad \textbf{(2.10)}$$

EXAMPLE 2.2

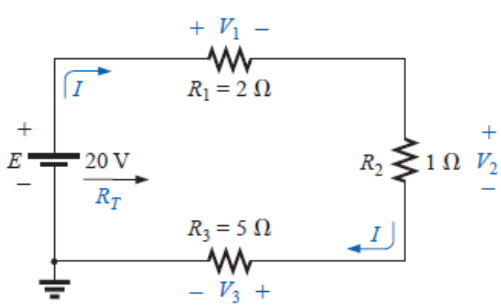

a. Find the total resistance for the series circuit
b. Calculate the source current I_s.
c. Determine the voltages V_1, V_2, and V_3.
d. Calculate the power dissipated by R_1, R_2, and R_3.
e. Determine the power delivered by the source, and compare it to the sum of the power levels of part (d).

Solutions:

a. $R_T = R_1 + R_2 + R_3 = 2\ \Omega + 1\ \Omega + 5\ \Omega = \mathbf{8\ \Omega}$

b. $I_s = \dfrac{E}{R_T} = \dfrac{20\text{ V}}{8\ \Omega} = \mathbf{2.5\ A}$

c. $V_1 = IR_1 = (2.5\text{ A})(2\ \Omega) = \mathbf{5\ V}$
$V_2 = IR_2 = (2.5\text{ A})(1\ \Omega) = \mathbf{2.5\ V}$
$V_3 = IR_3 = (2.5\text{ A})(5\ \Omega) = \mathbf{12.5\ V}$

d. $P_1 = V_1I_1 = (5\text{ V})(2.5\text{ A}) = \mathbf{12.5\ W}$
$P_2 = I_2^2R_2 = (2.5\text{ A})^2(1\ \Omega) = \mathbf{6.25\ W}$
$P_3 = V_3^2/R_3 = (12.5\text{ V})^2/5\ \Omega = \mathbf{31.25\ W}$

e. $P_{del} = EI = (20\text{ V})(2.5\text{ A}) = \mathbf{50\ W}$
$P_{del} = P_1 + P_2 + P_3$
$50\text{ W} = 12.5\text{ W} + 6.25\text{ W} + 31.25\text{ W}$
$\underline{50\text{ W} = 50\text{ W} \quad \text{(checks)}}$

Series and parallel resistance

2.3 Parallel Circuits

Two network configurations, series and parallel, form the framework for some of the most complex network structures. A clear understanding of each will pay enormous dividends as more complex methods and networks are examined. We will now examine the **parallel circuit** and all the methods and laws associated with this important configuration.

Two elements, branches, or networks are in* parallel *if they have two points in common.

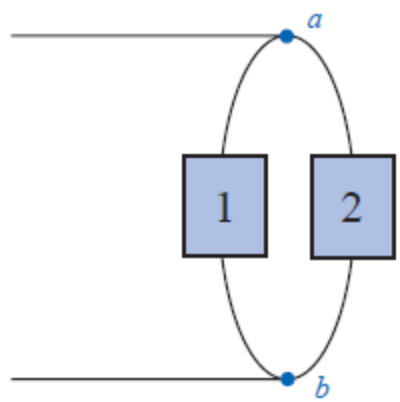

Figure 2.3 ***Parallel elements.***

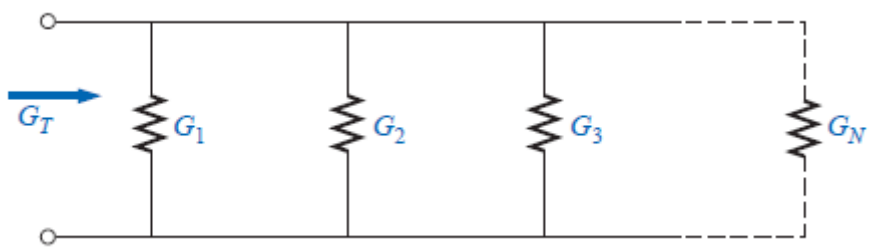

Figure 2.4 ***Determining the total conductance of parallel conductances.***

For parallel elements, the total conductance is the sum of the individual conductances.

$$G_T = G_1 + G_2 + G_3 + \cdots + G_N \qquad (2.11)$$

Series and parallel resistance

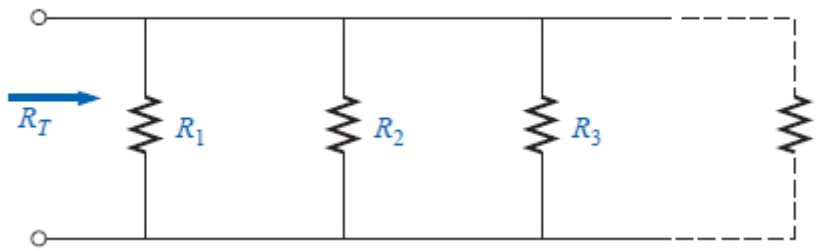

Figure 2.5 ***Determining the total resistance of parallel resistors***.

$$\boxed{\frac{1}{R_T} = \frac{1}{R_1} + \frac{1}{R_2} + \frac{1}{R_3} + \cdots + \frac{1}{R_N}} \qquad \textbf{(2.12)}$$

EXAMPLE 2.3 Determine the total conductance and resistance for the parallel network of Fig. 2.5.

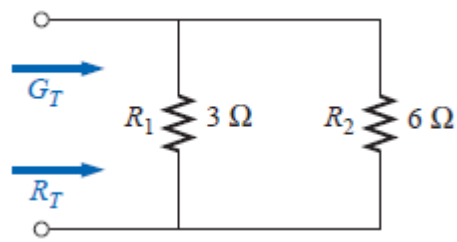

solution

$$G_T = G_1 + G_2 = \frac{1}{3\ \Omega} + \frac{1}{6\ \Omega} = 0.333\ \text{S} + 0.167\ \text{S} = \mathbf{0.5\ S}$$

and

$$R_T = \frac{1}{G_T} = \frac{1}{0.5\ \text{S}} = \mathbf{2\ \Omega}$$

the total resistance of two parallel resistors is the product of the two divided by their sum.

$$\boxed{R_T = \frac{R_1 R_2}{R_1 + R_2}} \qquad \textbf{(2.13)}$$

Series and parallel resistance

EXAMPLE 2.4 Calculate the total resistance of the parallel network of Fig. below ??

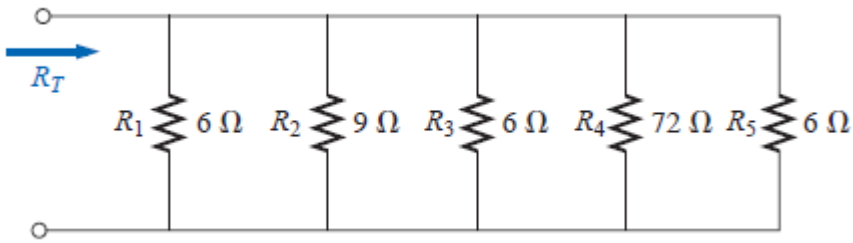

Solution: The network is redrawn in Fig. below :

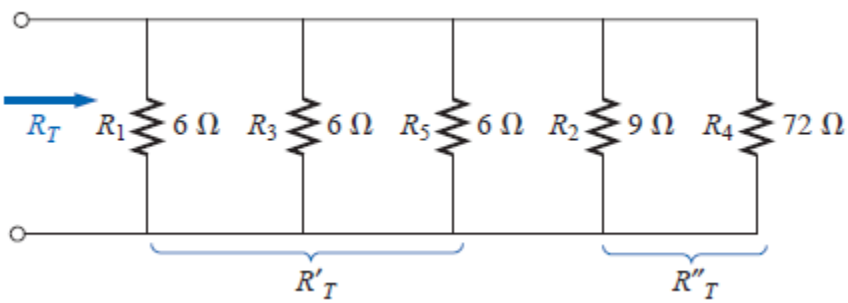

$$R'_T = \frac{R}{N} = \frac{6\ \Omega}{3} = 2\ \Omega$$

$$R''_T = \frac{R_2R_4}{R_2 + R_4} = \frac{(9\ \Omega)(72\ \Omega)}{9\ \Omega + 72\ \Omega} = \frac{648\ \Omega}{81} = 8\ \Omega$$

and $$R_T = R'_T \parallel R''_T$$

In parallel with

$$= \frac{R'_T R''_T}{R'_T + R''_T} = \frac{(2\ \Omega)(8\ \Omega)}{2\ \Omega + 8\ \Omega} = \frac{16\ \Omega}{10} = \mathbf{1.6\ \Omega}$$

Series and parallel resistance