جامعة الفرات الاوسط التقنية / المعهد التقني- سماوة
قسم التقنيات الكهربائية

# المحاضرة الثالثة

## اسم المادة / دوائر كهربائية

## المرحلة الدراسية / الاولى

## العام الدراسي / 2022 – 2023

## استاذ المادة : بشائر مكي جبر

# Series and parallel resistance

## 2.4 PARALLEL CIRCUITS

The network of Fig. 6.21 is the simplest of parallel circuits. All the elements have terminals *a* and *b* in common. The total resistance is determined by $RT = R1R2/(R1 + R2)$, and the source current by $Is = E/RT$. Throughout the text, the subscript *s* will be used to denote a property of the source. Since the terminals of the battery are connected directly across the resistors *R*1 and *R*2, the following should be obvious:

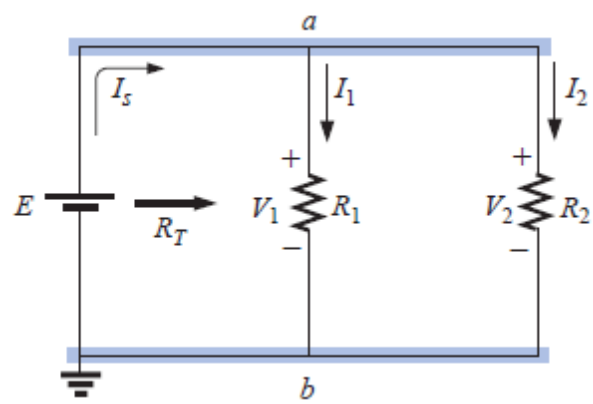


***The voltage across parallel elements is the same.*** Using this fact will result in

$$V_1 = V_2 = E$$

and

$$I_1 = \frac{V_1}{R_1} = \frac{E}{R_1}$$

with

$$I_2 = \frac{V_2}{R_2} = \frac{E}{R_2}$$

If we take the equation for the total resistance and multiply both sides by the applied voltage, we obtain

$$E\left(\frac{1}{R_T}\right) = E\left(\frac{1}{R_1} + \frac{1}{R_2}\right)$$

and

$$\frac{E}{R_T} = \frac{E}{R_1} + \frac{E}{R_2}$$

# Series and parallel resistance

Substituting the Ohm's law relationships appearing above, we find that the source current

$$I_s = I_1 + I_2$$

permitting the following conclusion:

***For single-source parallel networks, the source current ($I_s$) is equal to the sum of the individual branch currents.***

The power dissipated by the resistors and delivered by the source can be determined from

$$P_1 = V_1 I_1 = I_1^2 R_1 = \frac{V_1^2}{R_1}$$

$$P_2 = V_2 I_2 = I_2^2 R_2 = \frac{V_2^2}{R_2}$$

$$P_s = E I_s = I_s^2 R_T = \frac{E^2}{R_T}$$

Example:

a. Calculate $R_T$.
b. Determine $I_s$.
c. Calculate $I_1$ and $I_2$, and demonstrate that $I_s = I_1 + I_2$.
d. Determine the power to each resistive load.
e. Determine the power delivered by the source, and compare it to the total power dissipated by the resistive elements.

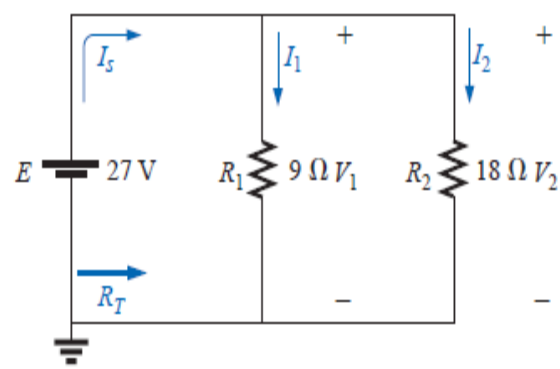


***Solutions:***

a. $R_T = \dfrac{R_1 R_2}{R_1 + R_2} = \dfrac{(9\ \Omega)(18\ \Omega)}{9\ \Omega + 18\ \Omega} = \dfrac{162\ \Omega}{27} = \mathbf{6\ \Omega}$

b. $I_s = \dfrac{E}{R_T} = \dfrac{27\ \text{V}}{6\ \Omega} = \mathbf{4.5\ A}$

# Series and parallel resistance

c. $I_1 = \frac{V_1}{R_1} = \frac{E}{R_1} = \frac{27\text{ V}}{9\ \Omega} = \mathbf{3\ A}$

$I_2 = \frac{V_2}{R_2} = \frac{E}{R_2} = \frac{27\text{ V}}{18\ \Omega} = \mathbf{1.5\ A}$

$I_s = I_1 + I_2$

$4.5\text{ A} = 3\text{ A} + 1.5\text{ A}$

$\mathbf{4.5\ A} = \mathbf{4.5\ A}$ (checks)

d. $P_1 = V_1I_1 = EI_1 = (27\text{ V})(3\text{ A}) = \mathbf{81\ W}$

$P_2 = V_2I_2 = EI_2 = (27\text{ V})(1.5\text{ A}) = \mathbf{40.5\ W}$

e. $P_s = EI_s = (27\text{ V})(4.5\text{ A}) = \mathbf{121.5\ W}$

$= P_1 + P_2 = 81\text{ W} + 40.5\text{ W} = \mathbf{121.5\ W}$

## 2.5 Series-Parallel Networks

**series-parallel networks** ***are networks that contain both series and parallel circuit configurations.***

**EXAMPLE 2.6** Find the indicated currents and voltages for the network of Fig below ??

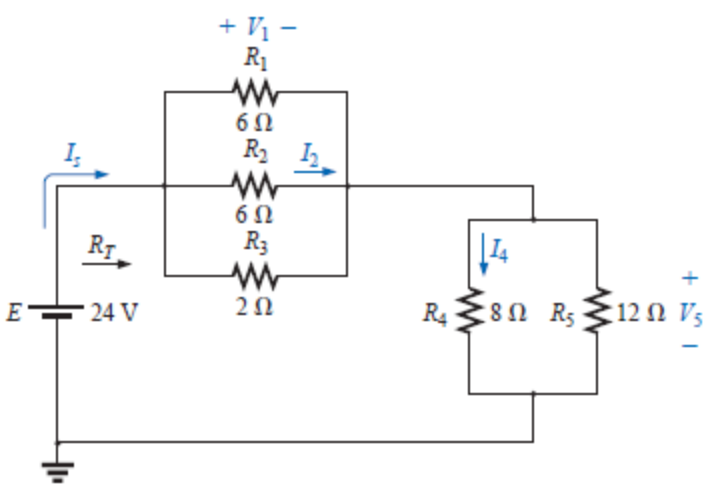


Solution:

# Series and parallel resistance

$$R_{1\|2} = \frac{R}{N} = \frac{6\ \Omega}{2} = 3\ \Omega$$

$$R_A = R_{1\|2\|3} = \frac{(3\ \Omega)(2\ \Omega)}{3\ \Omega + 2\ \Omega} = \frac{6\ \Omega}{5} = 1.2\ \Omega$$

$$R_B = R_{4\|5} = \frac{(8\ \Omega)(12\ \Omega)}{8\ \Omega + 12\ \Omega} = \frac{96\ \Omega}{20} = 4.8\ \Omega$$

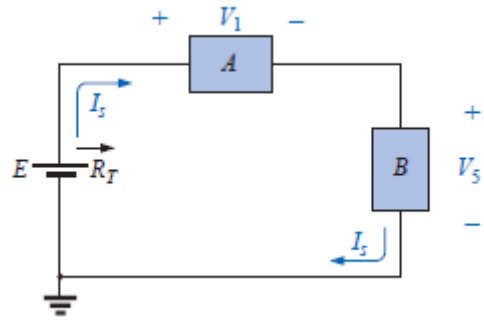


$$R_T = R_{1\|2\|3} + R_{4\|5} = 1.2\ \Omega + 4.8\ \Omega = \mathbf{6\ \Omega}$$

$$I_s = \frac{E}{R_T} = \frac{24\ \text{V}}{6\ \Omega} = \mathbf{4\ A}$$

with

$$V_1 = I_s R_{1\|2\|3} = (4\ \text{A})(1.2\ \Omega) = \mathbf{4.8\ V}$$

$$V_5 = I_s R_{4\|5} = (4\ \text{A})(4.8\ \Omega) = \mathbf{19.2\ V}$$

Applying Ohm's law,

$$I_4 = \frac{V_5}{R_4} = \frac{19.2\ \text{V}}{8\ \Omega} = \mathbf{2.4\ A}$$

$$I_2 = \frac{V_2}{R_2} = \frac{V_1}{R_2} = \frac{4.8\ \text{V}}{6\ \Omega} = \mathbf{0.8\ A}$$

## 2.6 Y-D (T-p) AND D-Y (p-T) CONVERSIONS

Circuit configurations are often encountered in which the resistors do not appear to be in series or parallel.

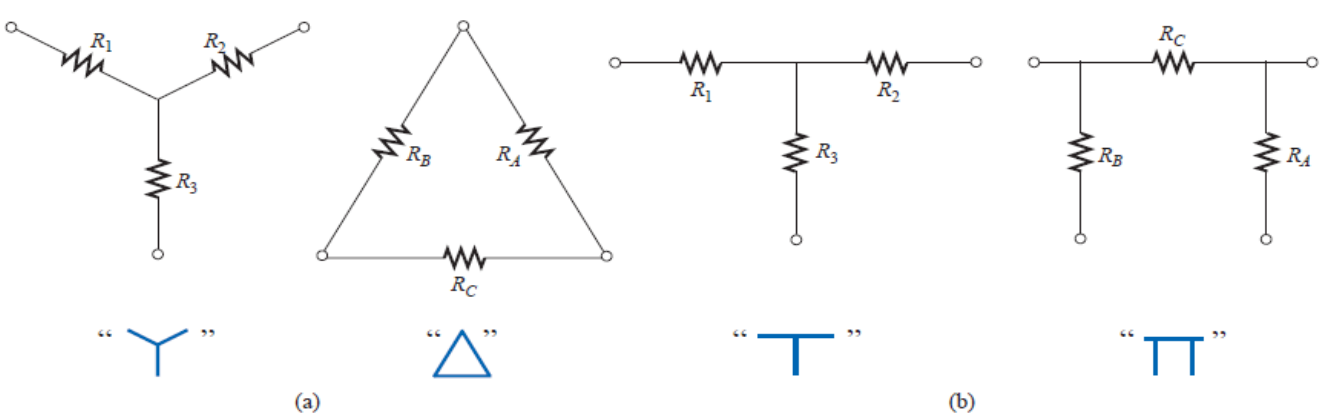


*The Y (T) and* D (p) *configurations.*

# Series and parallel resistance

Under these conditions, it may be necessary to convert the circuit from one form to another to solve for any unknown quantities if mesh or nodal analysis is not applied. versa. Two circuit configurations that often account for these difficulties are the **wye** and **delta configurations**. They are also referred to as the **tee (T)** and **pi (π),** respectively,. Note that the pi is actually an inverted delta. The purpose of this section is to develop the equations for converting from D to Y, or vice

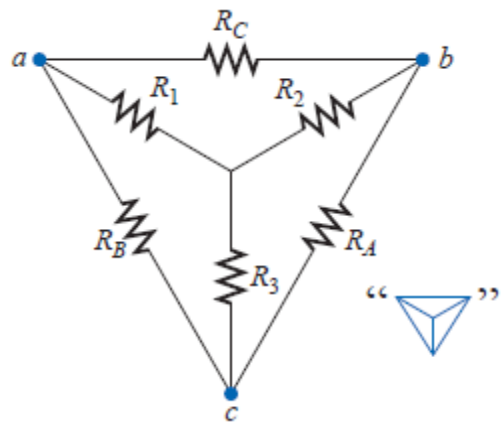


*Introducing the concept of* D-*Y or Y*-D *conversions.*

1. **<u>To obtain the relationships necessary to convert from a D to a Y</u>**

resulting in the following expression for $R_3$ in terms of $R_A$, $R_B$, and $R_C$:

$$R_3 = \frac{R_A R_B}{R_A + R_B + R_C} \qquad \textbf{(2.14)}$$

Following the same procedure for $R_1$ and $R_2$, we have

$$R_1 = \frac{R_B R_C}{R_A + R_B + R_C} \qquad \textbf{(2.15)}$$

and

$$R_2 = \frac{R_A R_C}{R_A + R_B + R_C} \qquad \textbf{(2.16)}$$

2. **<u>To obtain the relationships necessary to convert from a Y to a D</u>**

# Series and parallel resistance

and $$R_C = \frac{R_1R_2 + R_1R_3 + R_2R_3}{R_3} \quad \textbf{(2.17)}$$

We follow the same procedure for $R_B$ and $R_A$:

$$R_A = \frac{R_1R_2 + R_1R_3 + R_2R_3}{R_1} \quad \textbf{(2.18)}$$

and $$R_B = \frac{R_1R_2 + R_1R_3 + R_2R_3}{R_2} \quad \textbf{(2.19)}$$

**3. <u>If R1 = R2 =R3 or RA = RB =RC</u>**

$$R_Y = \frac{R_\Delta}{3}$$

or $$R_\Delta = 3R_Y$$

**<u>EXAMPLE 2.7</u>** Convert the D of Fig. below to a Y ??

# Series and parallel resistance

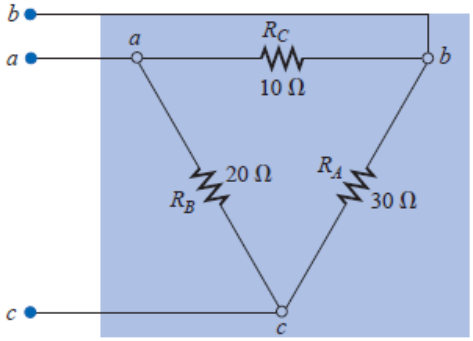


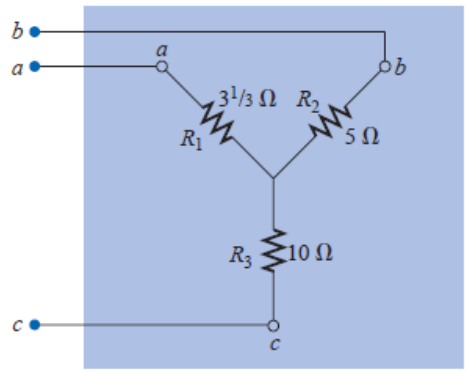


***Solution:***

$$R_1 = \frac{R_B R_C}{R_A + R_B + R_C} = \frac{(20\ \Omega)(10\ \Omega)}{30\ \Omega + 20\ \Omega + 10\ \Omega} = \frac{200\ \Omega}{60} = \mathbf{3\tfrac{1}{3}\ \Omega}$$

$$R_2 = \frac{R_A R_C}{R_A + R_B + R_C} = \frac{(30\ \Omega)(10\ \Omega)}{60\ \Omega} = \frac{300\ \Omega}{60} = \mathbf{5\ \Omega}$$

$$R_3 = \frac{R_A R_B}{R_A + R_B + R_C} = \frac{(20\ \Omega)(30\ \Omega)}{60\ \Omega} = \frac{600\ \Omega}{60} = \mathbf{10\ \Omega}$$

**<u>EXAMPLE 2.8</u>** Find the total resistor of figure below ??

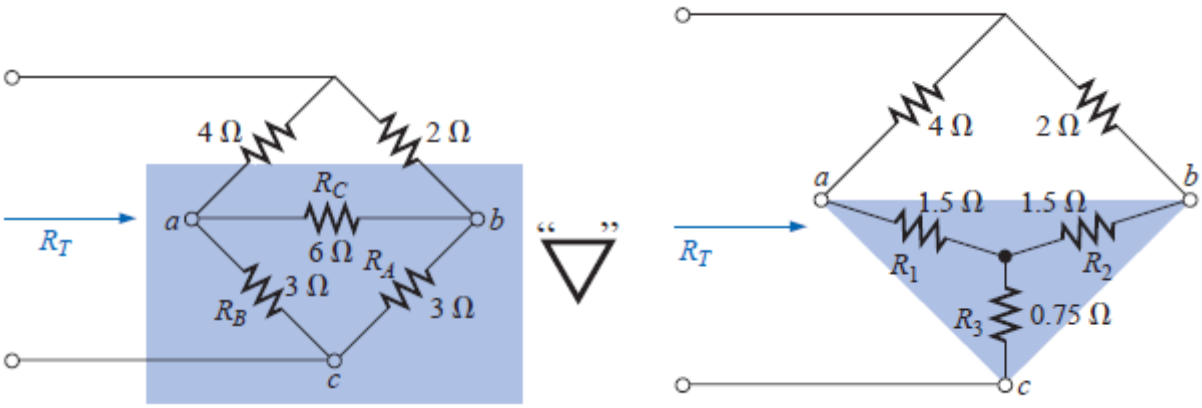

# Series and parallel resistance

Solution:

Two resistors of the Δ were equal; therefore, two resistors of the Y will be equal.

$$R_1 = \frac{R_B R_C}{R_A + R_B + R_C} = \frac{(3\ \Omega)(6\ \Omega)}{3\ \Omega + 3\ \Omega + 6\ \Omega} = \frac{18\ \Omega}{12} = \mathbf{1.5\ \Omega}$$

$$R_2 = \frac{R_A R_C}{R_A + R_B + R_C} = \frac{(3\ \Omega)(6\ \Omega)}{12\ \Omega} = \frac{18\ \Omega}{12} = \mathbf{1.5\ \Omega}$$

$$R_3 = \frac{R_A R_B}{R_A + R_B + R_C} = \frac{(3\ \Omega)(3\ \Omega)}{12\ \Omega} = \frac{9\ \Omega}{12} = \mathbf{0.75\ \Omega}$$

$$R_T = 0.75\ \Omega + \frac{(4\ \Omega + 1.5\ \Omega)(2\ \Omega + 1.5\ \Omega)}{(4\ \Omega + 1.5\ \Omega) + (2\ \Omega + 1.5\ \Omega)}$$

$$= 0.75\ \Omega + \frac{(5.5\ \Omega)(3.5\ \Omega)}{5.5\ \Omega + 3.5\ \Omega}$$

$$= 0.75\ \Omega + 2.139\ \Omega$$

$$R_T = \mathbf{2.889\ \Omega}$$