جامعة الفرات الاوسط التقنية
المعهد التقني سماوة
قسم التقنيات الكهربائية

المحاضرة الرابعة

POWER ELECTRONICS

المرحلة الثانية

2023 - 2022

ازدهار ياسر محسن

الاختبار القبلي

- *A transistor switch circuit has the following specification:*

$$V_{cc}=5\ V,\ R_c=750\ \Omega,\ R_B=10K\ \Omega,\ \beta=25\ ,\ V_{BE}\ (on)=0.7V,\ V_{CE}=0.4\ V$$

Find the minimum input voltage necessary to operate the transistor in the saturation region.

- *Defend the work stat for the transistor.*

Transistor as a switch

1. Transistor symbols and physical – structure

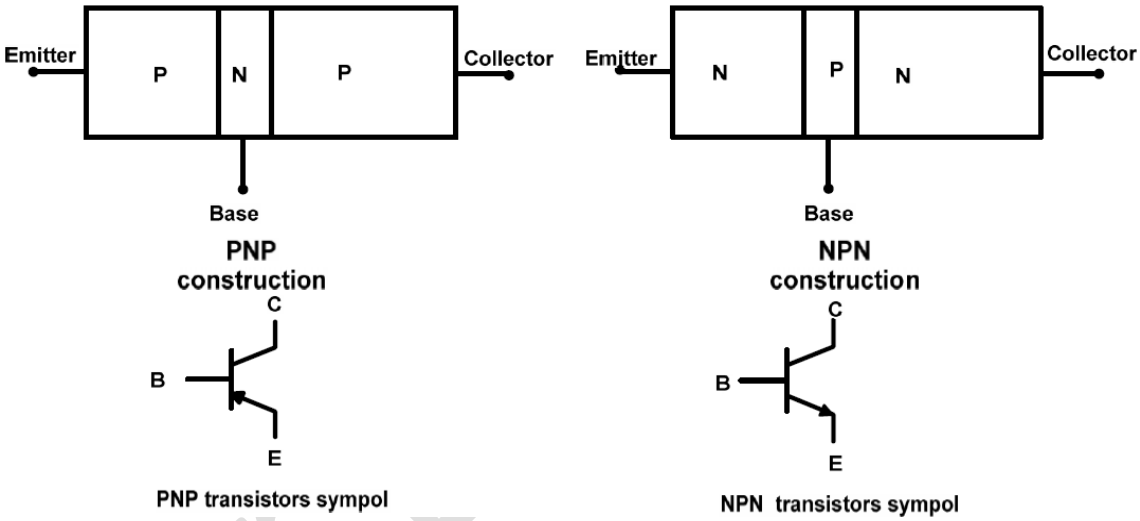

2. Transistor connection :

a) Common base connection.
b) Common emitter connection.
c) Common collector connection.

$\propto$ = Ic/Ie → common – base short – circuit current gain .
β = Ic/Ib → common –emitter short –circuit current gain.

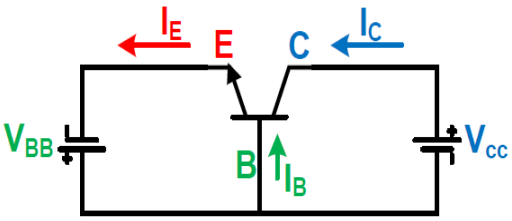

3. Input characteristic:- It is the curve between base current (I_B) and base – emitter voltage V_{BE} at constant collector – emitter voltage V_{CE}. The characteristic resembles that of a forward biased diode curve

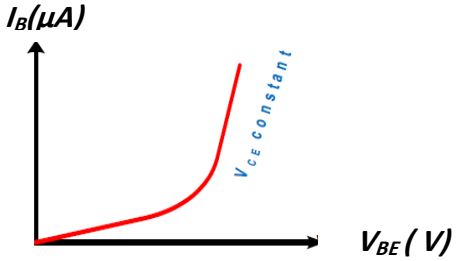

4. **Output characteristic**: - *It is the curve between collectors current I_c and collector – emitter voltage VCE at constant base current (I_B) .*

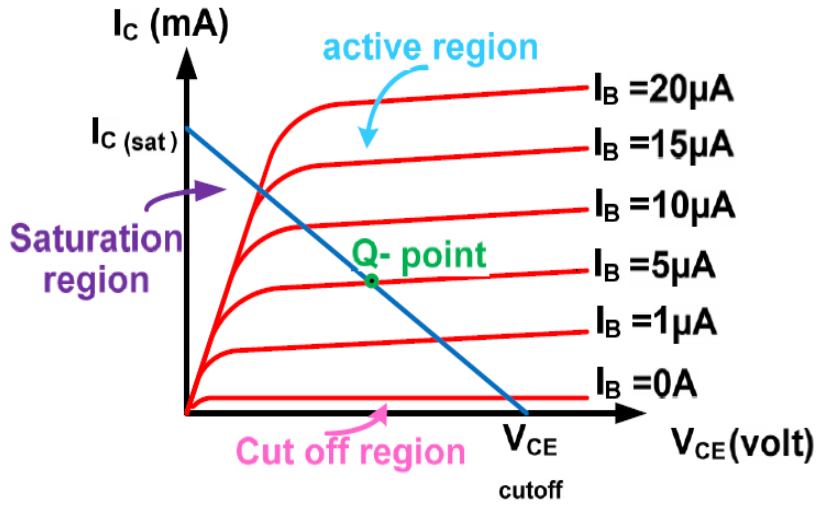

Mode	EBJ	CBJ
CUT OFF	Reverse	Reverse
Active	forward	Revers
Saturation	forward	forward

5. **Arithmetic equation** :

Input equation :

$V_{BB} = I_B R_B + V_{BE}$

$I_B = (V_{BB} - V_{BE})/(R_B)$

VBE = 0.7 v for silicon
= 0.3v for germanium

Output equation :

$V_{cc} = I_C R_C + V_{CE}$

At outoff $I_B = 0$, $I_c = 0$

$\therefore V_{CC} = V_{CE}$

$\therefore V_{CE}(_{outoff}) = {}_{CC}$

At saturation $V_{CE} = 0$

$\therefore V_{CC} = I_c R_c$

$I_{c\ (sat)} = V_{CC}/(R_c)$

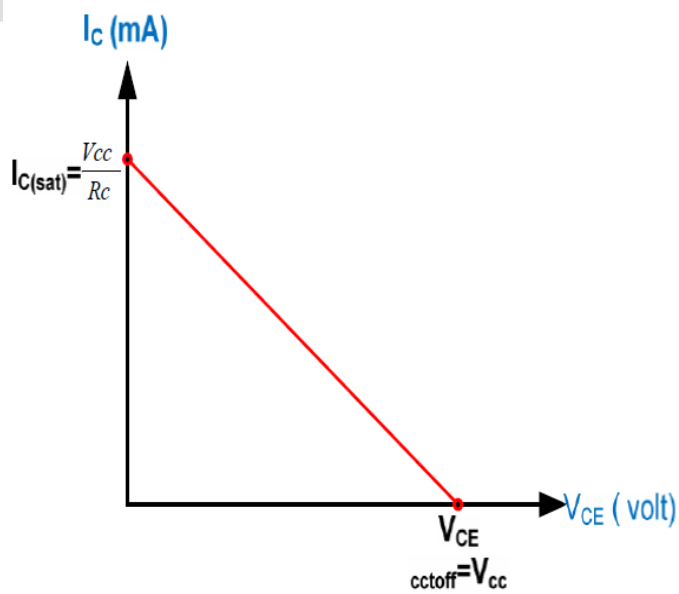

- *The ratio of I_{CS} to I_B is called forced current gain βf where*

$$\beta_f = \frac{I_{CS}}{I_B} < natural\ current\ gain\ \beta\ or\ h_{FE}\ .$$

- *the total power loss in the two junction of a transistor*

$$: \quad P_T = V_{BE} I_B + V_{CE} I_C$$

6. type of the Transistor switch

Overdriven factor (ODF) $ODF = \frac{I_B}{I_{BS}}$ *ODF may be as high as 4 or 5*

- *Over Driven* ..... *ODF > 3*
- *Fully Driven* ..... *ODF < 3*

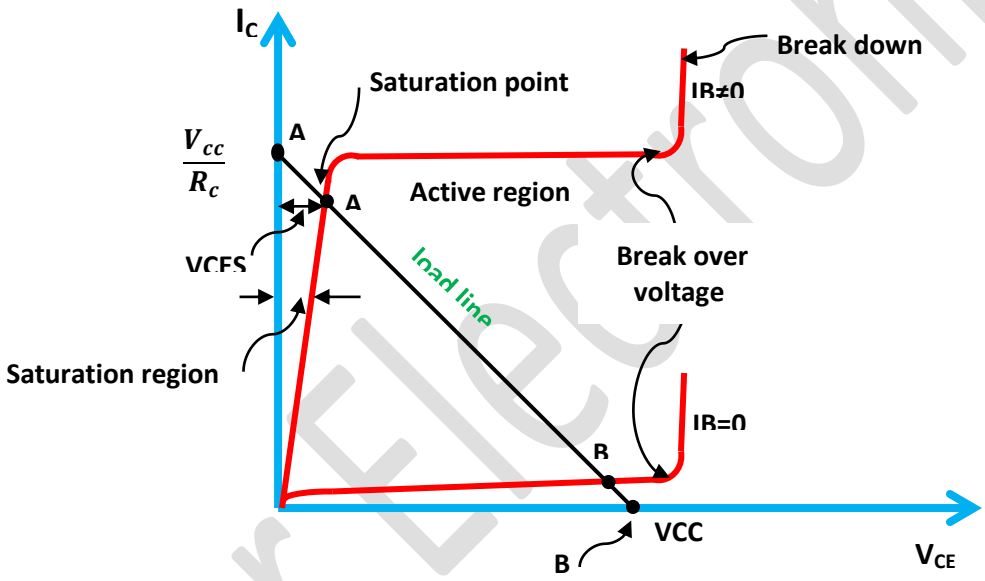

- هناك شروط مهمة لعمل الترانزستور كمفتاح :

١) ان يكون ذا مقاومة منخفضة عند وضع الغلق لذلك يجب ان تكون النقطة (A') المبينة في الشكل السابق في منطقة الاشباع .

٢) ان يكون ذا مقاومة عالية عند وضع الفتح لذلك يجب ان تكون النقطة (B') في منطقة القطع .

هذا ويطلق على المفاتيح التي تعمل من حافة القطع الى حافة الاشباع بالمفاتيح ذات التشغيل الكامل fully driven اما اذا تم زيادة تيار القاعدة (للتأكد من ان يعمل في منطقة الاشباع)،كما في النقطة (A) فسنحصل على ما يُسمى بمفتاح فوق التشغيل over driven.

- ولقد تم اختيار صيغة الباعث المشترك عند عمل الترانزستور كمفتاح بسبب انخفاض اشارة الدخل المطلوبة لتحويل مفتاح الترانزستور من حالة الى اخرى ، عند مقارنتها بالإشارة المراد غلقها او فتحها .

Power Electronics

Examples

EX 1

In the transistor switch circuit as shown below, if the transistor parameters is β_{dc}=45, V_{CEsat}=-0.15V, V_{BEsat}=-0.65V, find R_B value to obtain on fully driven.

Sol:

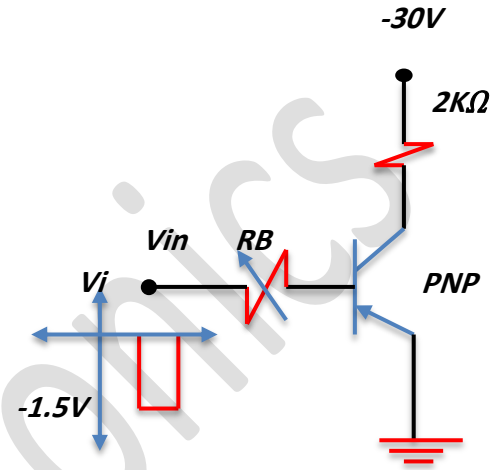

$$R_B = \frac{Vin - VBE}{IB}$$

$$I_B = \frac{Ic}{\beta}$$

$$Ic = \frac{Vcc - VCE}{Rc}$$

$$Ic = \frac{-30-(-0.15)}{2*10^3}$$

=-14.925mA

$$IB = \frac{-14.925}{45} = -0.33mA$$ I_B minimum

I_B=3*I_{Bmin} =3*(-0.33) = -0.99mA fully Driven

$$R_B = \frac{-1.5-(-0.65)}{-0.99*10^{-3}} = 858\Omega$$

EX 2

The BFY52 transistor used as a switch in the circuit shown below calculate the input voltage which turn the transistor to on state .

Sol:-

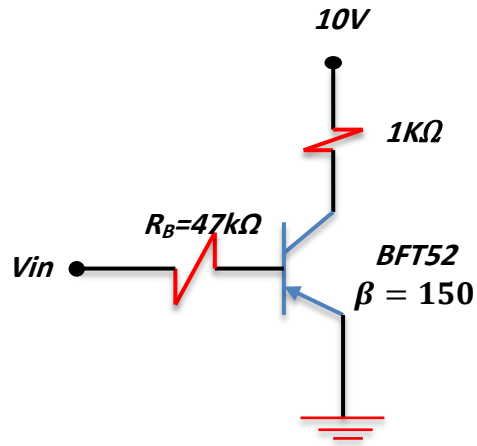

$$Vin = IBRB + VBE$$

$$Ic = \frac{Vcc - VCE}{Rc}$$

$$Ic = \frac{10-0}{1*10^3} = 10mA$$

$$IB = \frac{Ic}{\beta} = \frac{10}{150} = 66.66\ \mu A$$

V_{in}= 66.66$*\ 10^{-6} * 47 * 10^3 + 0.7 = 3.8V$

EX3:-

In the transistor switching circuit shown below it's recued to working in the over driven case and with trigger voltage of (1 V). Find all of R_1, R_B, if you know that β=50 and VBE =0.65 V.

Solution:-

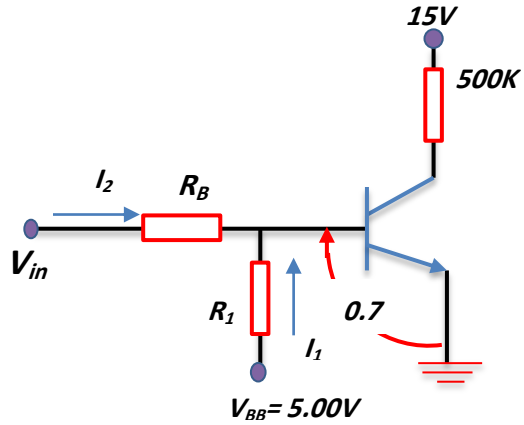

$$Ic = \frac{Vcc}{Rc} = \frac{15}{500} = 30mA$$

$$I_{B(min)} = \frac{Ic}{\beta} = \frac{30}{50} = 600\mu A$$

$$I_1 = 2 * (600\mu A) = 1.2mA$$

$$I_1 * R_1 = V_{BB} - V_{BE}$$

$$R_1 = \frac{V_{BB} - V_{BE}}{I_1} = \frac{5-0.65}{1.2*10^{-3}} = 3625\Omega$$

$$I_B * R_B = V_{in} - V_{BE}$$

Power Electronics

$$R_B = \frac{V_{in}-V_{BE}}{I_B} = \frac{1-0.65}{600*10^{-6}} = 583\ \Omega$$

Ex 5:-

A bipolar transistor show in fig(1)has current gain β=40 . The load resistance Rc =10Ω, dc supply voltage Vcc=130 V and input voltage to base circuit , V_{BB}=10 V .for V_{CE}=1.0 V and V_{BE}=1.5V ,calculate :

1) *The value of R_B for operation in the saturated state,*
2) *The value of R_B for an over drive factor 5,*
3) *Forced-current gain ,*
4) *Power loss in the transistor for both parts 1 and 2 .*

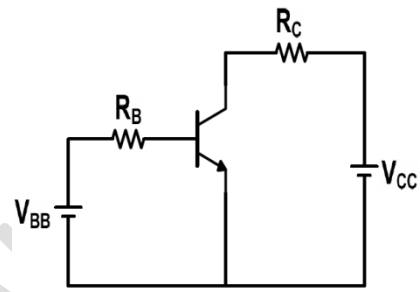

Solution:-

1- $I_{cs} = \frac{V_{cc}-V_{CES}}{R_c} = \frac{130-1.0}{10} = 12.90A$

$I_{Bs} = \frac{I_{cs}}{\beta} = \frac{12.90}{40} = 0.3225\ A$

$R_B = \frac{10-1.5}{0.3225} = 26.35659\ \Omega$

2-$I_B = ODF * I_{BS} = 5 * 0.3225A = 1.6125\ A$

$R_B = \frac{10-1.5}{1.6125} = 5.27\ \Omega$

3-$\beta_f = \frac{I_{cs}}{I_B} = \frac{12.90}{1.6125} = 8$ *which is less than the natural current gain β=40*

4- *Power loss in transistor* $P_T = V_{BES} * I_{BE} + V_{CES} * I_{CS}$

*For normal base drive P_T = 1.5*0.3225+1.0*12.9=13.384*

With over drive, $P_T = 1.5 * 1.625 + 1.0 * 12.9 = 15.32W$

It is seen from above that power loss with hard drive of transistor is

الاختبار البعدي

- *Write the input and output equation for the following circuit :*

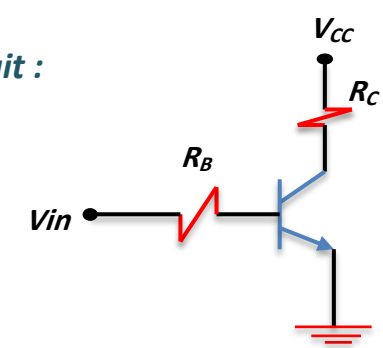

- *Enumerate the switching type.*

Power Electronics