جامعة الفرات الاوسط التقنية
المعهد التقني سماوة
قسم التقنيات الكهربائية

المحاضرة الثامنة

POWER ELECTRONICS

المرحلة الثانية

2023 – 2022

ازدهار ياسر محسن

الاختبار القبلي

Q1 : *prove that* ***Av=-Rf/R*** *for the operational amplifier inverter type .*
Q2 : *draw the oscillator circuit by using op-amp and input ,output wave form .*

The Operational Amplifier
مكبر العمليات

Named so for the large number of application and operations it can perform. It is DC amplifier used in control systems and other electronic Circuit .

Op-Amp are available as ICs in TO and DIL packages . Principally it is a two input one output device suitable for amplification of d.c or a.c low frequency signals .

➢ *1-Symbol and equivalent circuit*

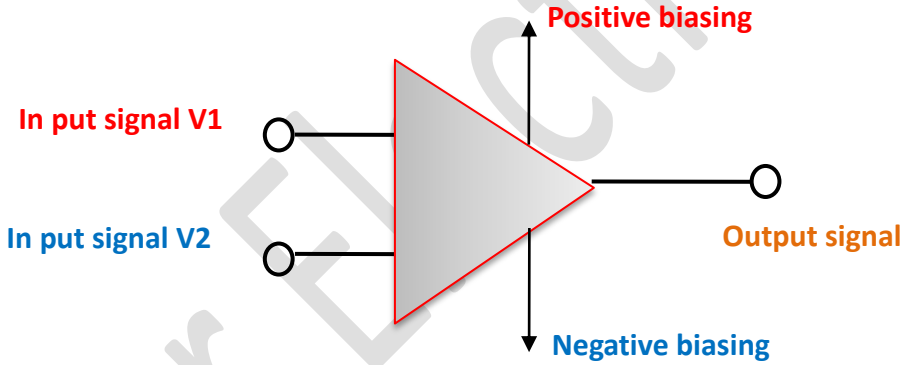

➢ *advantages of Ideal Op-Amp*

1. ***High Open Loop Gain (A) .***
2. ***Very High Input Impedance (Z_{in}) .***
3. ***Low Output Impedance (Z_{out}) .***
4. ***High Band width frequency***

➢ *Op-Amp basing power supply*

Two power supplies are used with common reference.

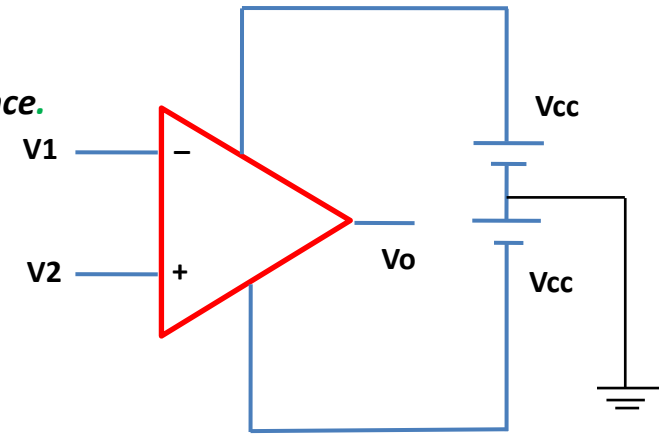

Power Electronics

- **Open loop voltage gain :**

$A_{V_{open\ loop}} = \frac{V_O}{V_d}$ Where $V_d = V_2 - V_1$

$A_{V_{open\ loop}} = \frac{V_O}{V_2 - V_1}$

Since V_d very small then $A_{V_{open\ loop}}$ is very high then Vo is limited to V^+ and V^- of the supply.

- **Closed loop voltage gain**

Using negative feedback system a closed loop is obtained.

- **Negative feedback**

It is one of the most useful concepts in electronics .NFB is the process whereby apportion of the output voltage of an amplifier is returned to the input with phase angle that opposes (or subtracts form) the input signal.

A closed loop voltage gain is the gain of an op-amp with external feedback. $A_{V_{close\ loop}}$ is determined by the external component values and can controlled by them.

Circuit with feed back

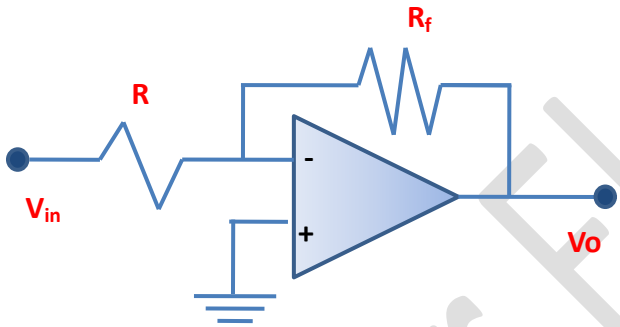

1-Inverter op-amp

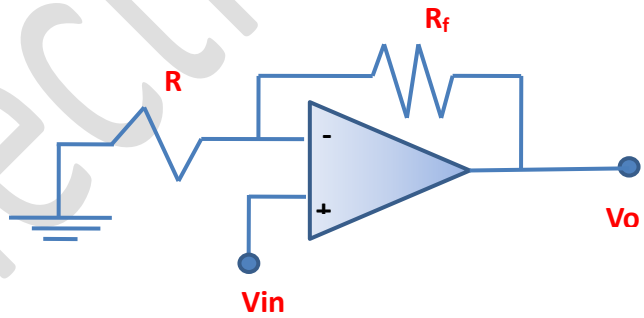

2-Non-Inverter op-amp

For Inverter op-amp

$A_{V_{close\ loop}} = \frac{V_O}{V_d} = \frac{V_O}{-V_{in}} = -\frac{R_f}{R}$

$V_o = A_V * V_{in}$

For Non-Inverter op-amp

$A_{V_{close\ loop}} = \frac{V_O}{V_{in}} = \frac{V_O}{-V_{in}} = 1 + \frac{R_f}{R}$

$V_o = A_V * V_{in}$

Home Work

- *For the inverter operational amplifier, the phase angle between i/p & o/p voltage is one of the following :-*
  1. *90°*
  2. *180°*
  3. *270°*
  4. *0°*
- *The output impedance of an ideal operational amplifier in Ohms is one of the following:*
  - *a) Zero*
  - *b) b-Infinite*
  - *c) Few K Ohms*
  - *d) Few ohms*

Power Electronics

➢ The Op-Amp Application

1-Zero crossing detector: *one of the open loop circuit useful in power electronics .there are two kind of zero- crossing detector .*

a- Inverting Zero – crossing detector

Positive state if $V_{in} < 0$.
Negative state if $V_{in} > 0$.

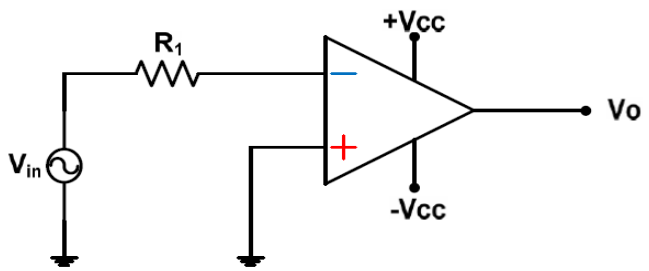

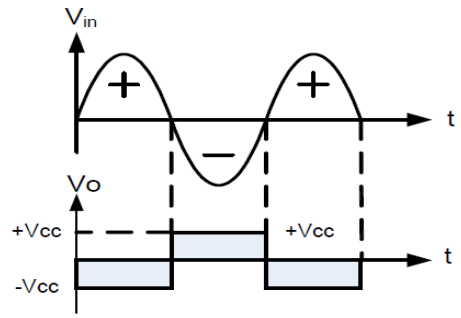

Circuit diagram *Input output waveforms*

Operation: *a sinusoidal wave is applied to (-ve) input when Vin just crosses (0) level output jumps to + and – saturation voltage amplitude of output is determined by magnitude of Vcc.*

b- non inverting zero – crossing detector

the output may be :-
Positive state if $V_{in} > 0$.
Negative state if $V_{in} < 0$.

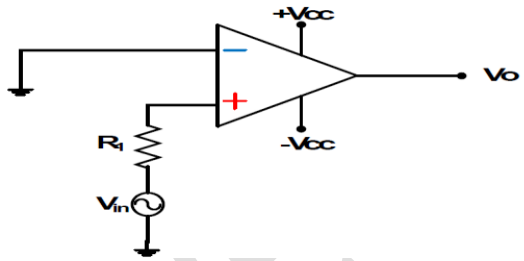

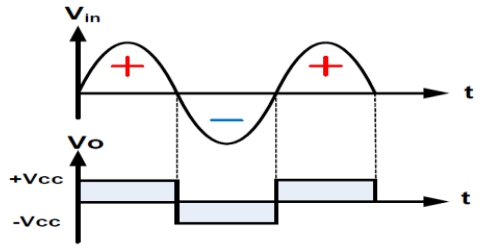

2-Comparator: *its name indicates that it compare two potentials one of them is reference potential while the other is variable with time . Comparator can give an indication of crossing a certain reference.*

V_R = Reference voltage

If $V_{in} > V_R$ then

$V_o = -V_{cc}$

If $V_{in} < V_R$ then

$V_o = V_{cc}$

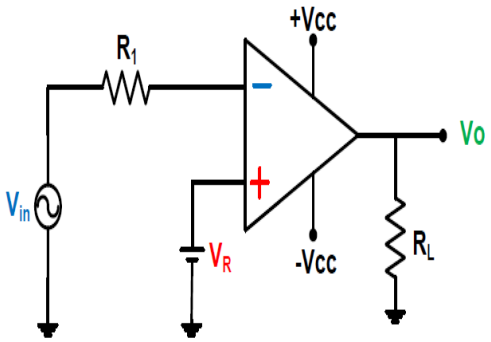

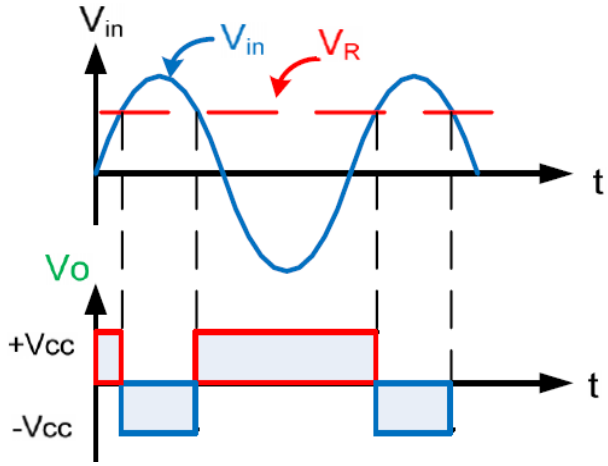

3-Square wave generator: ***different waveforms can be obtained by using Op-Amp; a square wave is one of them. it also called oscillator .***

Operation: ***when supply is applied to the circuit C starts to charge, a small potential will appear across R_b.***

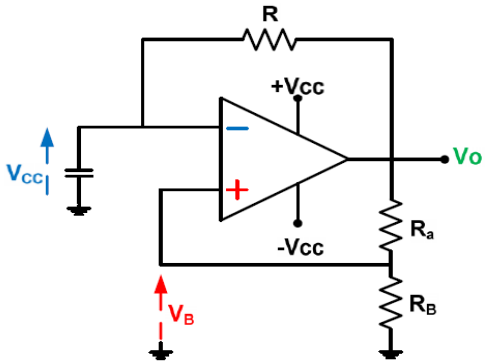

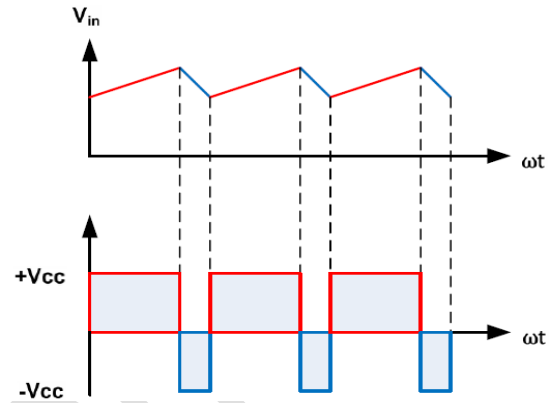

A) When $V_c < V_B$

$$V_o = +V_{cc}$$

B) When $V_c > V_B$

$$V_o = -V_{cc}$$

$$T_{charge} = T_{discharge}$$

$$T = T_{charge} + T_{discharge}$$

$$T_{charge} = R * C * ln\frac{1+K}{1-K}$$

$$\therefore T = 2 * R * C * ln\left[\frac{1+K}{1-K}\right]$$

$$K = \frac{R_b}{R_a+R_b} \Rightarrow V_B = K * V_o \Rightarrow V_B = \frac{R_b}{(R_a+R_b)}V_o$$

$$\Rightarrow f = \frac{1}{T}$$

Example: ***for the oscillator shown R = 10 k , $R_a = R_b$ = 10 kΩ , Vo =∓18 V , C= 0.1 μF , calculate (f , V_B) .***

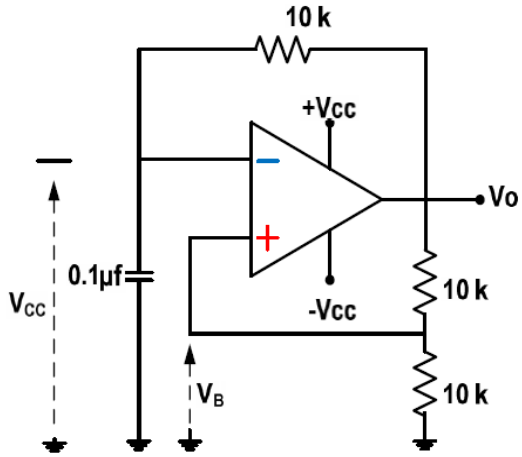

Sol:-

$$V_B = KV_o$$

$$= \frac{R_b}{(R_a+R_b)} * V_o$$

$$= \frac{10K}{(10K+10K)} * (\pm 18)$$

$$= 0.5 * (\pm 18) \quad = \pm 9\ volt$$

$$T = 2.R.C\ ln\frac{1+K}{1-K}$$

$$K = \frac{R_b}{(R_a+R_b)} = 0.5$$

$$T = 2 * 10 * 10^{+3} * 0.1 * 10^{-6}\ ln\frac{1+0.5}{1-0.5}$$

$$= 0.002\ ln\,3 \quad = 2.2 * 10^{-3} sec$$

$$f = \frac{1}{T} = \frac{1}{2.2*10^{-3}} = 0.45\ KHz$$

الاختبار البعدي

- ***Calculate the voltage gain and output voltage If you know that R_2=9KΩ, R1=1KΩ .for inverter and non-inverter op-amp. If V_{in}=2sin ωt***
- ***Drown the mono stable malty vibrator.***

Power Electronics