جامعة الفرات الاوسط التقنية
المعهد التقني سماوة
قسم التقنيات الكهربائية

المحاضرة السادسة

POWER ELECTRONICS

المرحلة الثانية

2023 – 2022

ازدهار ياسر محسن

الاختبار القبلي

- ***Named these circuit :***

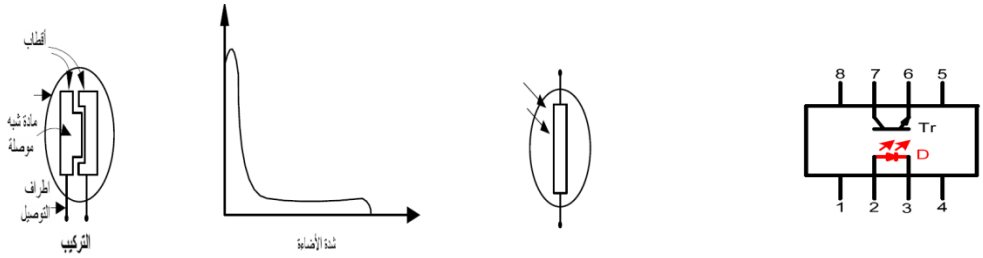

- ***Enumerate the light Emitting Diode Applications.***

Photo element
العناصر الضوئية

➢ ***Photo conductive cells***

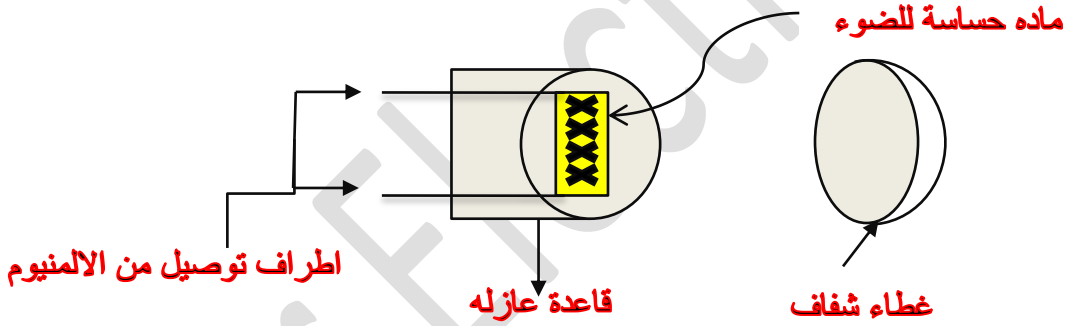

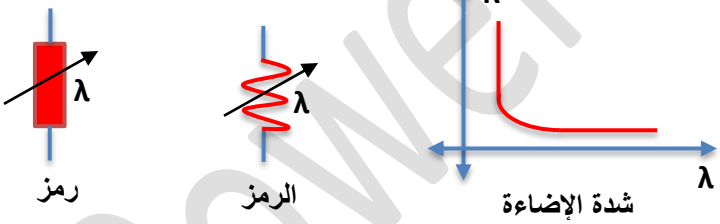

These cells are used heavily into controlled circuit as shown below

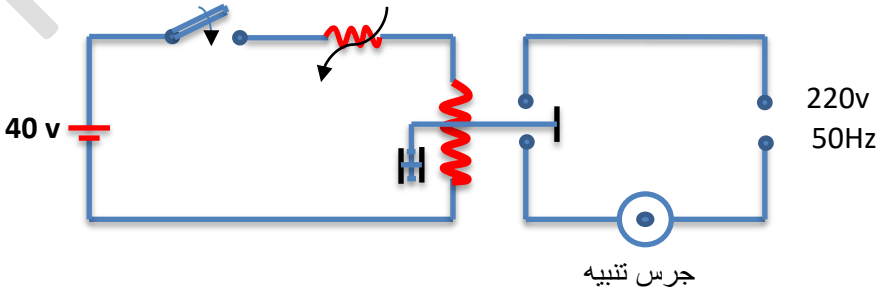

Power Electronics

➢ Photo diode (P.D)

The purpose of the P.D is to transform the light energy to the electrical energy, it is work in the reverse bias

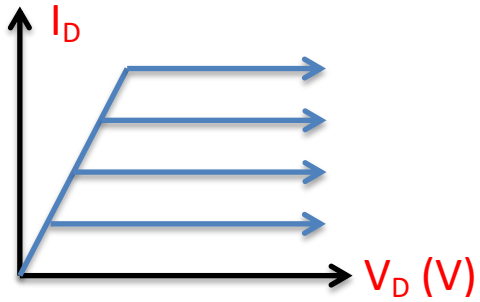

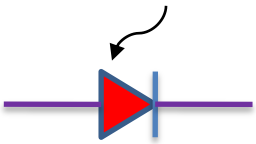

➢ C-photo Voltaic cells (P.C)

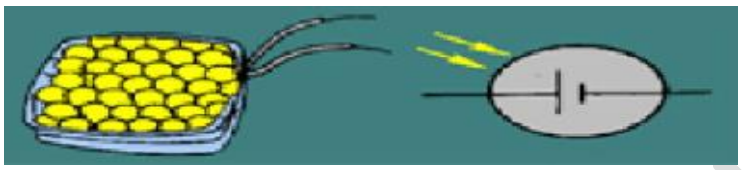

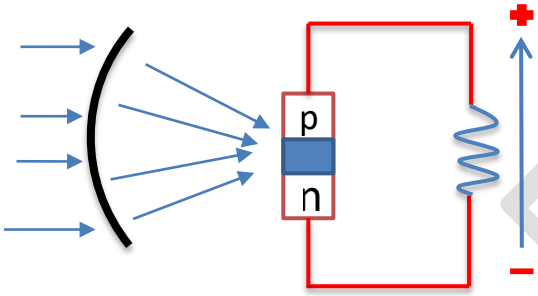

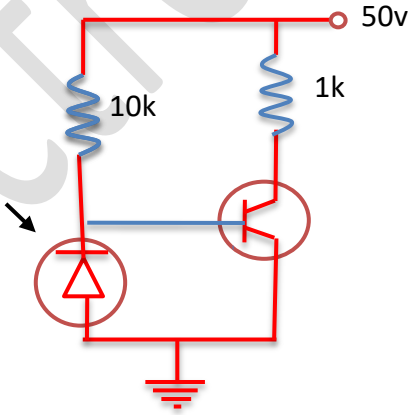

➢ photo transistor (PT)

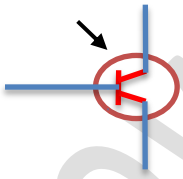

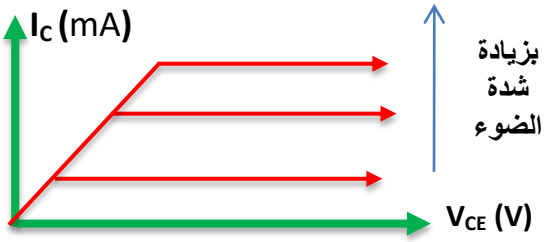

The practical circuit is (Darlington pair) as Relay

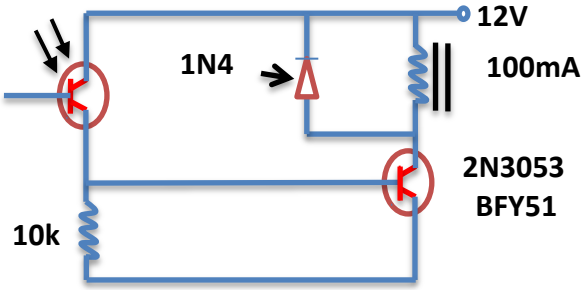

Power Electronics

➢ *light Emitting diode(L.E.D)*

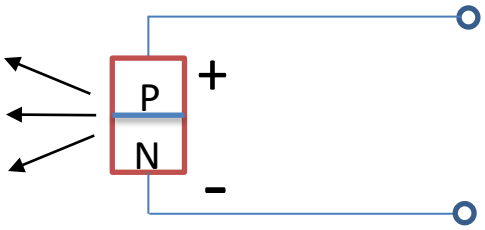

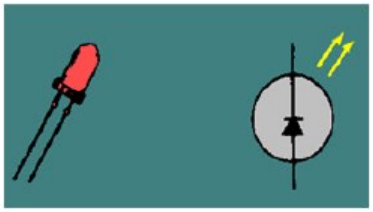

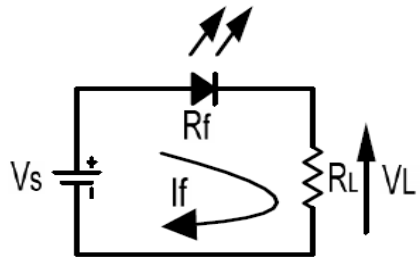

$$Vs = Vf + VL$$

$$= IfRf + IfRL$$

$$Rf = \frac{Vs - IfRL}{If}$$

$$If = \frac{Vs}{Rf + Rl}$$

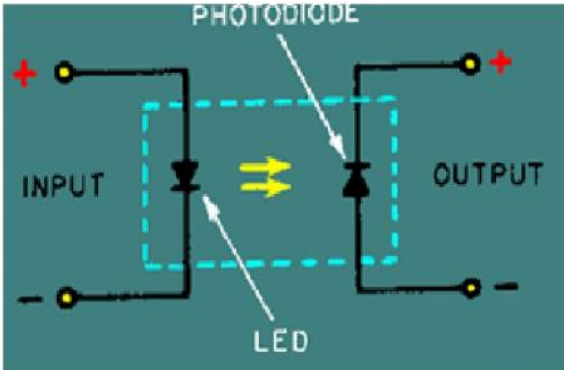

THE APPLICATION OF THE (L.E.D)

1- Optically Coupled Device

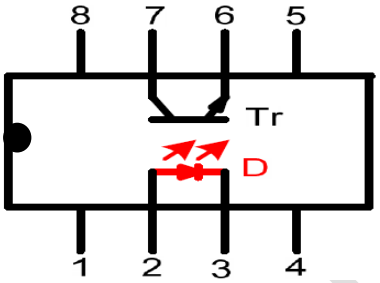

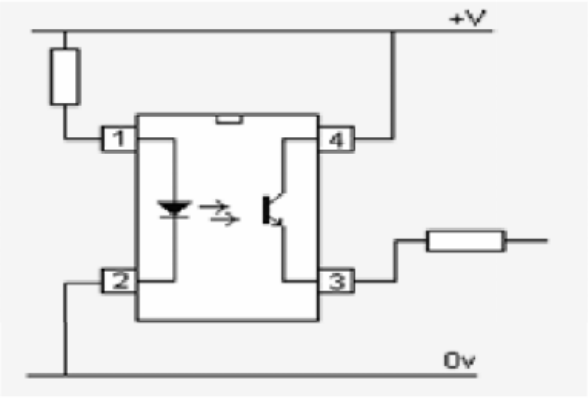

This circuit used to generate pulse trigger to the thyristor Gate

This circuit is used as a Buffer stage in the electronic circuit (logic and digital circuit) Instead the transformers or relays the electric isolation reach to 1200 KV but it is non-liner with small signal Application.

2- Seven Segment Display And Dot Matrix

3-

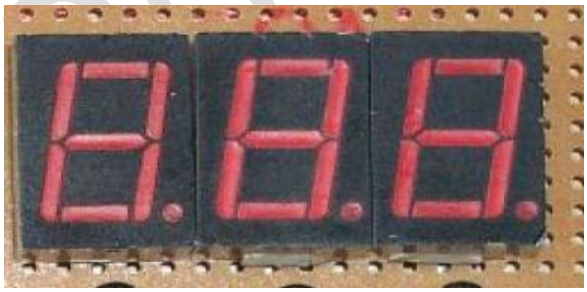

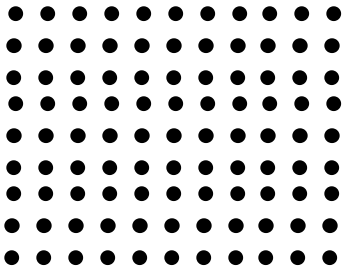

power electronics

EX1 :- For the circuit shown below find : I_c, V_{in} .take V_{CE}=0.3V

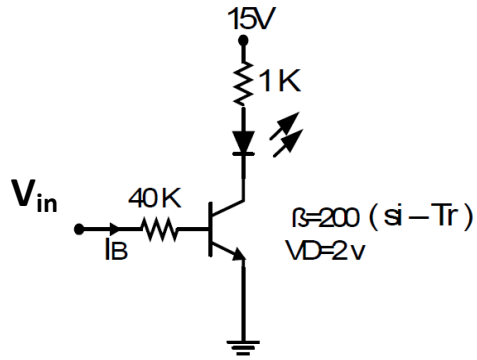

Sol:

$$I_c = \frac{V_{cc}-(V_{CE}+V_{LED})}{R_c}$$

$$Ic = \frac{15-(0.3+2)}{1*10^3} = 12.7mA$$

$$IB = \frac{Ic}{\beta} = \frac{12.7mA}{200} = 0.0635mA$$

$V_{in}=I_BR_B+V_{BE}$

$$= 0.0635 * 10^{-3} * 40 * 10^3 + 0.7 = 3.24\ V$$

Ex2:-For the circuit shown below , the TIL222 in the forward case has 2.3V when it conduct ,if the 2N3904 has ßdc=150, calculate I_{LED} , I_B take Vin value just make the transistor in the saturation region.

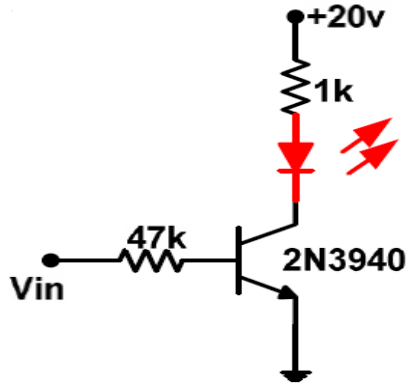

Sol :-

When the saturation Condition is apply V_{CE}=0 And

$$I_c = \frac{V_{cc}-(V_{CE}+V_{LED})}{R_c}$$

$$= \frac{20-2.3}{1*10^3} = 17.7mA$$

$Ic=I_{LED}$ =17.7mA

$$I_B = \frac{Ic}{\beta} = \frac{17.7}{150} = 0.118mA$$

$V_{in}=I_B*R_B+V_{BE}$ =0.118*47+0.7=6.246V

EX3: in the circuit shown below calculate the current passing through the light emitting diode if V_{LED}(1.6 v)

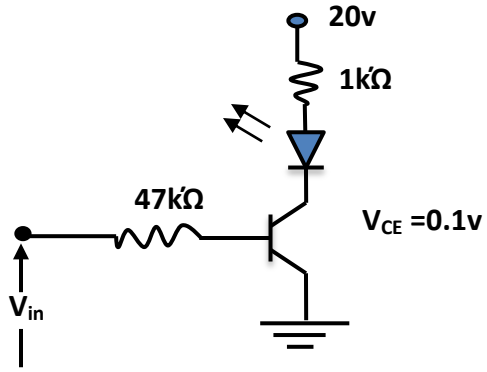

Sol :-

$Ic=I_{LED}$

$$II_c = \frac{V_{cc}-(V_{CE}+V_{LED})}{R_c} = \frac{20-(0.1+1.6)}{1*10^3} = 18.3mA$$

الاختبار البعدي

- For the circuit shown below calculate the Base current I_B :-

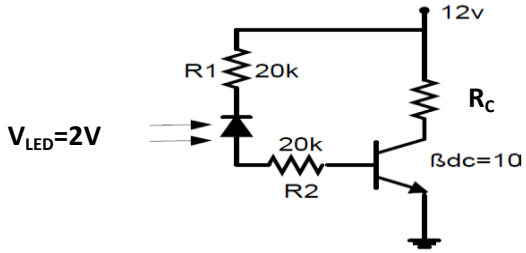

- Draw the optically coupled circuit .

Power Electronics