جامعة الفرات الاوسط التقنية
المعهد التقني سماوة
قسم التقنيات الكهربائية

المحاضرة التاسعة

POWER ELECTRONICS

المرحلة الثانية

2023 – 2022

ازدهار ياسر محسن

الاختبار القبلي

Q1 : *defined the following parameter for the thyristor :-*

1. *Holding current .*
2. *Break over voltage .*

Q2 : *draw the SCR construction with show its terminal .*

The thyristor
الثايرستور

The Construction

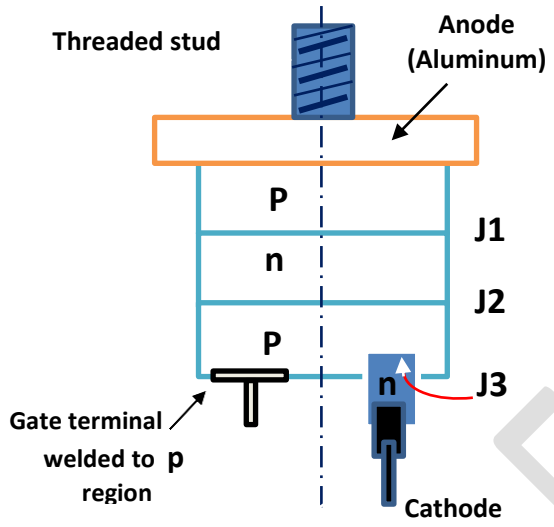

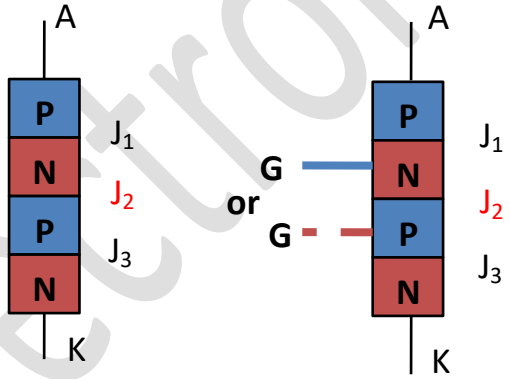

construction *thy* *control rectifier (SCR)*

The characteristics curve :

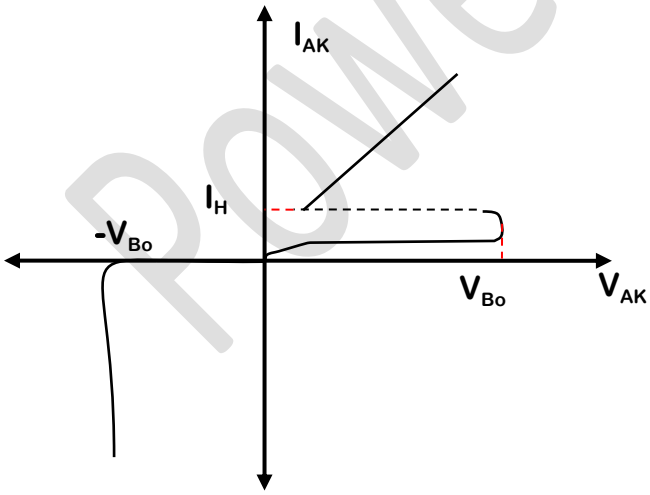

thyristor v-i curve

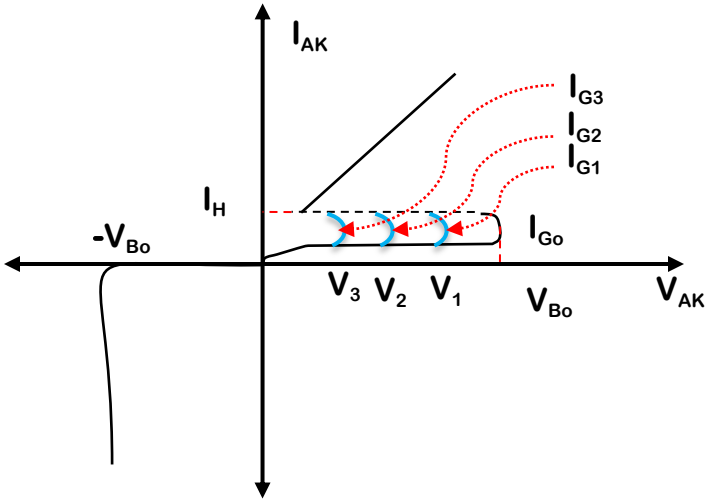

SCR v- i curve

V_{B0}*:-Break down voltage.*

I_H*:- Holding current .*

$I_{Go,1,2}$ *:- the current on the thyristor Gate*

$I_3 > I_2 > I_1 > I_{GO}$; $V_{Bo} > V_{B1} > V_{B2} > V_{B3}$

Power Electronics

➢ Thyristor representation :Two-Transistor Model

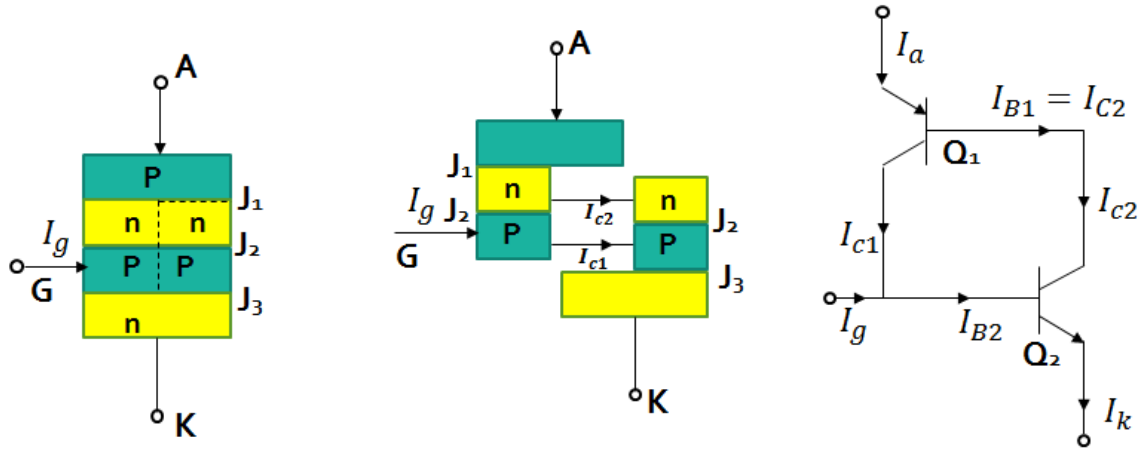

The principle of thyristor operation can be explain with the use of its two –transistor model. From this figure, two –transistor model is obtain by bisection the two middle layers, along the dotted line.

➢ Thyristor family:

في الاوراق الملحقة

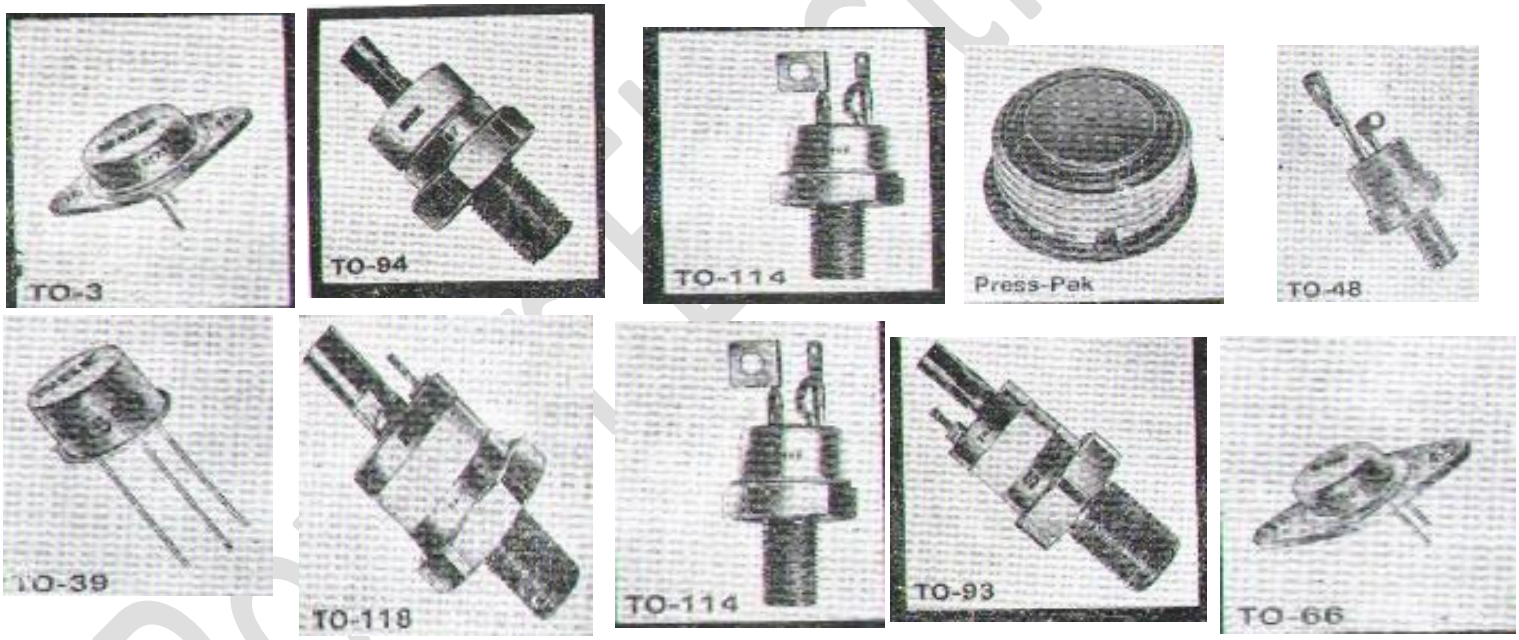

الاختبار البعدي

Named and draw the symbol for the following:-
SUS , SCR , SCS , Diac , Triac