جامعة الفرات الاوسط التقنية
المعهد التقني سماوة
قسم التقنيات الكهربائية

المحاضرة السابعة

POWER ELECTRONICS

المرحلة الثانية

2023 – 2022

ازدهار ياسر محسن

الاختبار القبلي

- *Defend the relaxation oscillator by using UJT.*
- *In the relaxation oscillator by using UJT determine the output frequency if R=1kΩ , C=0.5μF , η=0.65 .*
- *Design relaxation oscillator by using UJT has the following data :*
  Vcc=12V ,η=0.63 , RBB=6KΩ ,Vv=1 V ,
  Ip=0.5mA , Iv=4μA , T=500μS

The Unijunction transistor
ترانزستور أحادي الوصلة

Transistor symbols and physical – structure

A three terminal device whose construction is shown below :

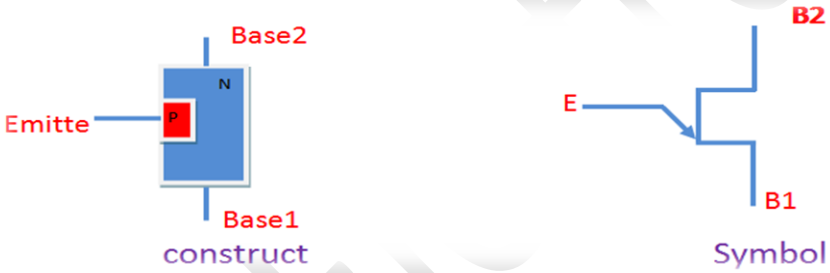

It has only one PN junction therefore its characteristics is different from those of either BJT or FET.

Equivalent circuit

State ON:

$V_E \geq V_{RB1} + V_d$

$V_{RB1} = \eta * V_{BB}$

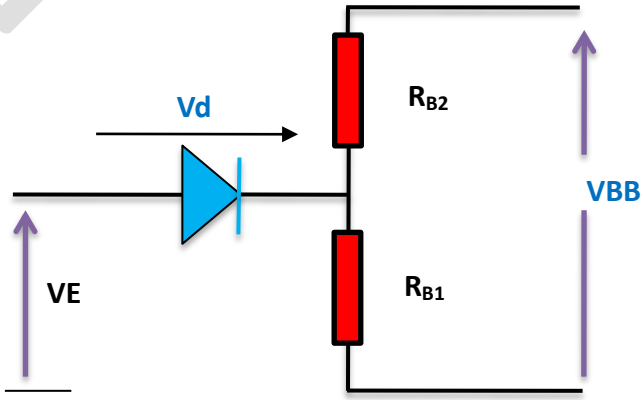

UJT characteristic { v-I curve }

$$R_{BB} = R_{B1} + R_{B2}$$

$$\eta = \frac{R_{B1}}{R_{BB}} = \frac{R_{B1}}{R_{B1}+R_{B2}}$$

η:intirsic standoff ratio

η is determined by the manufacturer and it lies between (0.5-0.75) .

Power Electronics

$I_E = 0$ $V_E = \eta V_{BB}$

When $V_E < \eta V_{BB}$

$V_E = V_p$ or above

then transistor triggered

and $I_E \uparrow$, $V_E \downarrow$ And transistor

Exhibits negative resistance

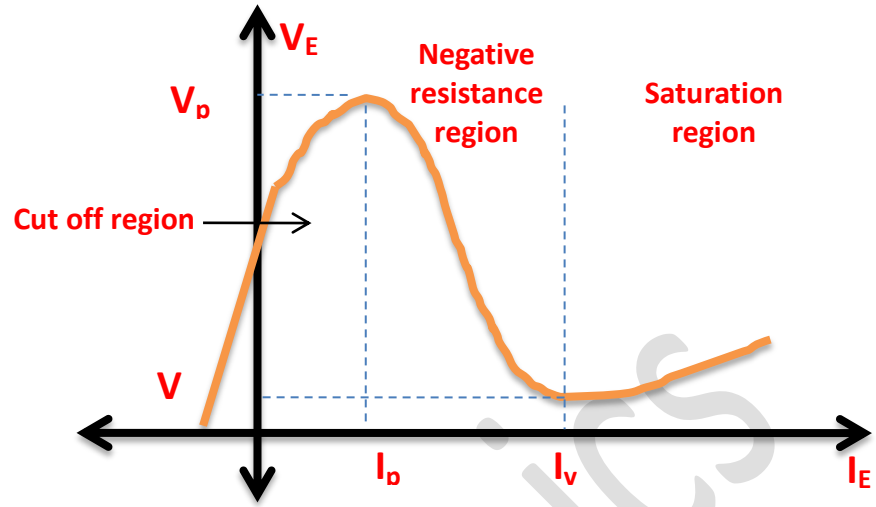

Comments: - the value of η determines the peak point (Firing) voltage Vp and is related to V_p By the following formula:

$$V_p = \eta V_{BB} + V_D$$

As long as the applied emitter voltage V_E is less than ($\eta V_{BB} + V_D$) there is no emitter current because the PN junction is not forward biased . The value of emitter voltage that causes the PN junction to become forward biased is called Vp {peak point voltage}.

➢ The UJT Application

The UJT can be used as trigger device for SCR s and triac's . Other applications include non-sinusoidal oscillators, saw tooth generators, phase control and timing circuits .

Relaxation Oscillator:

1- Circuit diagram :

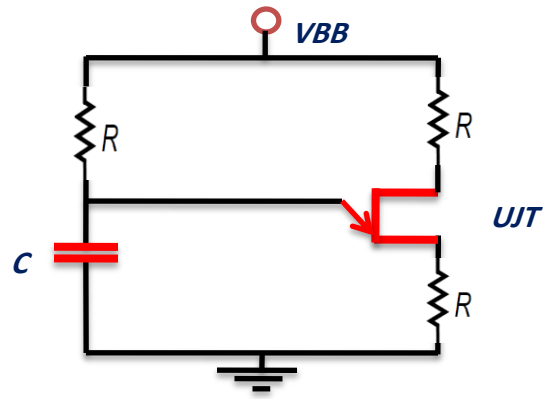

2- Operation: when D.C power is applied, the capacitor C charge exponentially through R_1 until it reaches the peak point voltage V_p at this point the PN junction becomes forward biased and the emitter characteristics goes the negative resistance region (i.e. $V_E \downarrow$ and $I_E \uparrow$) the capacitor then quickly discharges through R_2 when the capacitor voltage decreases to the valley point V_v , the UJT turns off the capacitor to charge again and the cycle repeated .

Power Electronics

3- Input and output wave form

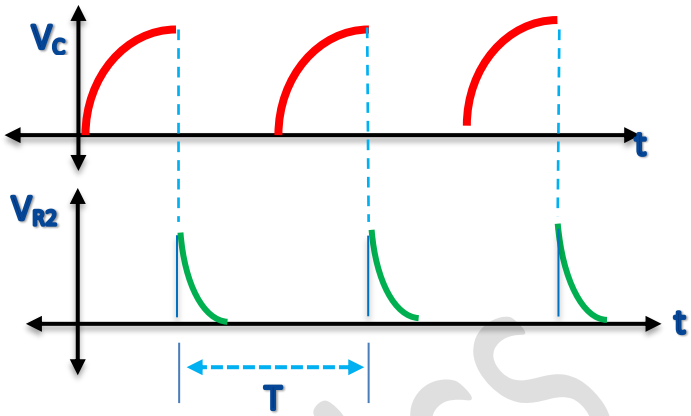

The periodic time (T)of the oscillation can Calculated by the following formula:

$$T = R * C * ln\frac{1}{(1-\eta)}$$

Conditions for turn- on and turn-off

In the relaxation oscillator shown certain conditions must be met the UJT to reliably turn on and off:

1- To ensure turn-on, R_1 must not limit I_E at the peak point to less than I_P to ensure this; the voltage drop across R_1 at the peak point should be greater than $I_P R_1$. Thus the condition for turn-on is: $V_{BB}-V_P > I_P R_1$

Or $R_1 < \frac{(V_{BB}-V_P)}{IP}$

2-To ensure turn-off of the UJT at the valley point , R_1 must be large enough that I_E (at the valley point) can decrease below the specified value of I_V .this means that the voltage across R_1 at the valley point must be less than $I_v R_1$ .thus the condition for turn –off is :

$$V_{BB} - V_v < I_v R_1$$

Or $R_1 > \frac{(VBB-Vv)}{Iv}$

So, for proper turn-on and turn-off, R_1 must be in this range

$$\frac{V_{BB} - V_p}{I_p} > R_1 > \frac{V_{BB} - V_v}{I_v}$$

EX :- In the Relaxation Oscillator circuit shown below determine a value of R1 that will ensure proper turn on and turn-off of the UJT. the characteristics of the UJT exhibit the following values :

η =0.5 ,V_v=1v ,I_v=10 mA, I_p=20 µA , V_p=14v , V_{BB}=30v

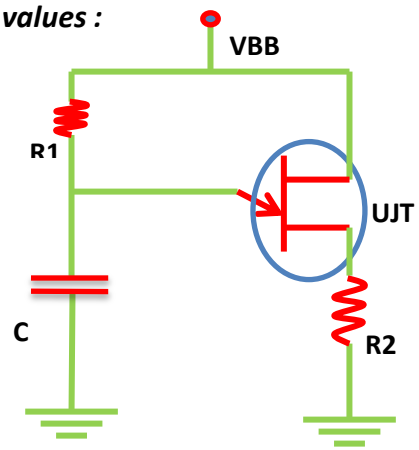

Solution:

$$\frac{V_{BB}-V_p}{I_p} > R_1 > \frac{V_{BB}-V_v}{I_v}$$

$$\frac{30-14}{20\mu} > R_1 > \frac{30-1}{10m}$$

$$800K\Omega > R_1 > 2.9K\Omega$$

as you can see,R_1 has quite a wide range of possible value that will work .

Power Electronics

Note: *since $V_p = \eta V_{BB}+V_D$ And because varies with temperature. And V_D is temperature dependent the stabilization of V_p is achieved by adding a small resistor in series with (B_2) its value is given by an Approximate*

$$Rs = \frac{0.7RBB}{\eta VBB}$$

Typical circuit

This circuit has the advantages of stability since that the oscillator frequency does not affected by the small change in supply voltage and does not depend on temperature changes.

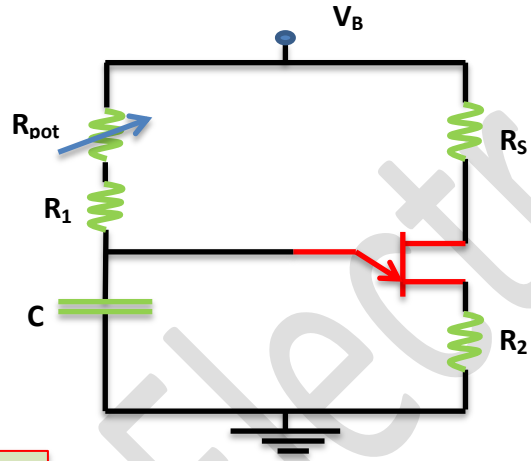

Home Work

Design a trigger circuit using UJT to operate at 5 KHz .Data for the UJT used is:
I_p=2nA , I_v=1mA , η=0.7,V_{BB} =30 V ,R_{BB} =9K Ω.
Note: The design of oscillator means selection of R_1 , C , R_2 , R

Examples:

EX1: for the circuit shown below,($\eta = 0.5$) for the UJT find T, f_o and Vo1.

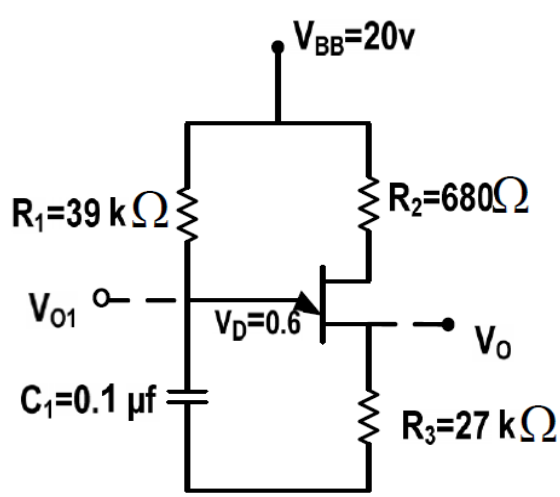

$$T = R_1 C \ln\frac{1}{1-\eta}$$

$$= 39 * 10^3 * 0.1 * 10^{-6} \ln\frac{1}{1-0.5}$$

= 2.7msec

$$f_o = \frac{1}{T} = \frac{1}{2.7*10^{-3}} = 370\ Hz$$

$$V_{o1} = \eta * V_{BB} + V_D = 0.5 * 20 + 0.6 = 10.6\ V$$

Power Electronics

EX :- A 2N2646 UJT transistor is used to construct an oscillator as shown in the circuit below , find :

1. **least and largest frequency that can be generated .**
2. **voltage on capacitor .**
3. **Draw circuit wave forms.**

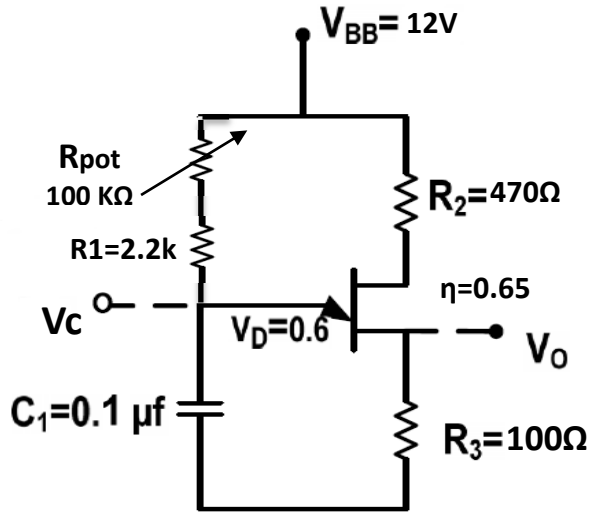

solution :

$$T = RC\, ln\frac{1}{1-\eta}$$

$$T = (R_1 + R_{pot})C\, ln\frac{1}{1-\eta}$$

$$T_{max} = (2.2 * 10^3 + 100 * 10^3) * 0.1 * 10^{-6}\, ln\frac{1}{1-0.65}$$

=102.2*0.1*1.049 m Sec. = 10.729 mSec

$$\therefore f_{min} = \frac{1}{T_{max}} = \frac{1}{10.729*10^{-3}} = 93.2Hz$$

$$T_{min} = (2.2 * 10^3 + 0) * 0.1 * 10^{-6} * ln\frac{1}{1-0.6}$$ **=0.23mSec**

$$f_{max} = \frac{1}{T_{min}} = \frac{1}{0.23*10^{-3}} = 4.33KHz$$

$V_c = \eta V_{BB} + V_D$ =0.65*12+ 0.6 = 4.8 V

الاختبار البعدي

- **Draw the input output waveform for relaxation oscillator by using UJT.**
- **For the circuit shown find the period of wave form given that, η=0.5.**

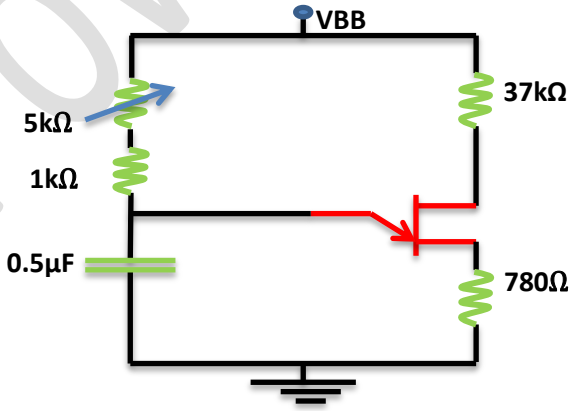

Power Electr