جامعة الفرات الاوسط التقنية
المعهد التقني سماوة
قسم التقنيات الكهربائية

المحاضرة الحادية عشر

POWER ELECTRONICS

المرحلة الثانية

2023 – 2022

ازدهار ياسر محسن

الاختبار القبلي

Fill in the blank(s) with the appropriate word(s)

1-We can use Diac in---------- .

a- pulse generator b-oscillator c- all of them

2- A triac can be regarded as a "---------thyristor" because it conducts in both directions.

a- two transistor b- unidirectional c- bidirectional

3- TRIAC can be used as a high power lamp -----

a- thyristor b- transistor c- oscillator

Thyristor family

عائلة الثايرستور (الانواع المشهورة)

- ***The Diac***

الدايك THE Diac

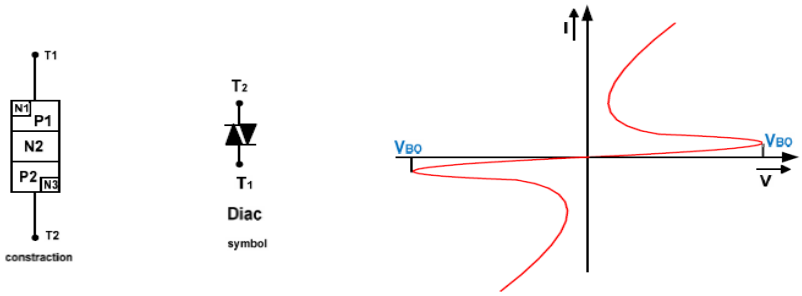

Diac is used in the following :

1) *Counters, register and timing circuits of computers,*
2) *Pulse generator,*
3) *Voltage sensors,*
4) *Oscillators*
5) *Proximity sensor circuit etc.*

الترايك TRIAC

- ***Triac***

الرمز والتركيب

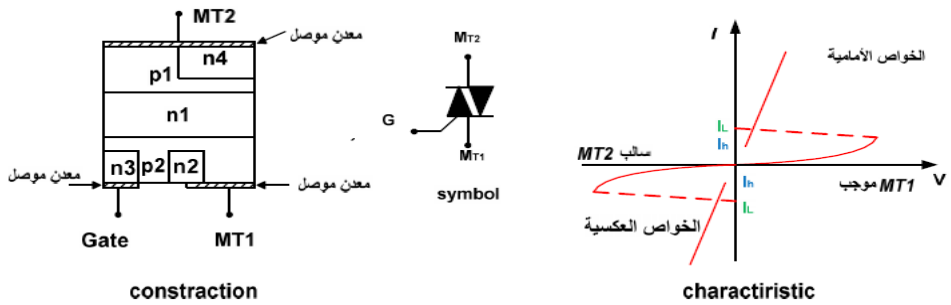

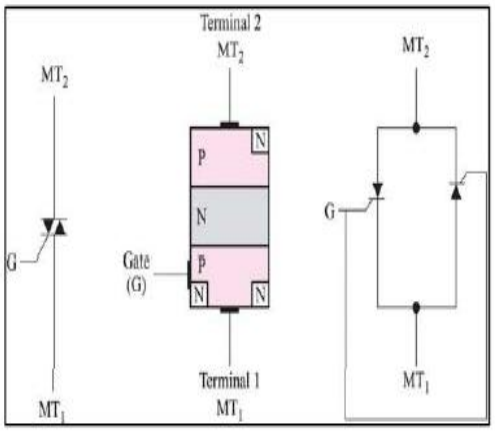

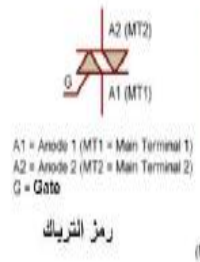

رمز التريباك

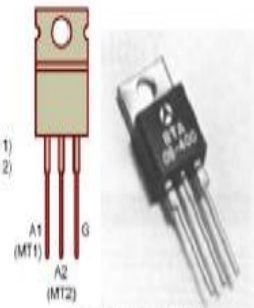

شكل احد انواع التريباك

- ***Triac Application***

1) *As a high power lamp switch.*
2) *Electronic changeover of transformer taps.*
3) *Light dimmer*
4) *Speed controls for electric fans and other electric motors*
5) *Modern computerized control circuits*
6) *For minimizing radio interference*

Practical Circuit

1. ***phase control of power***

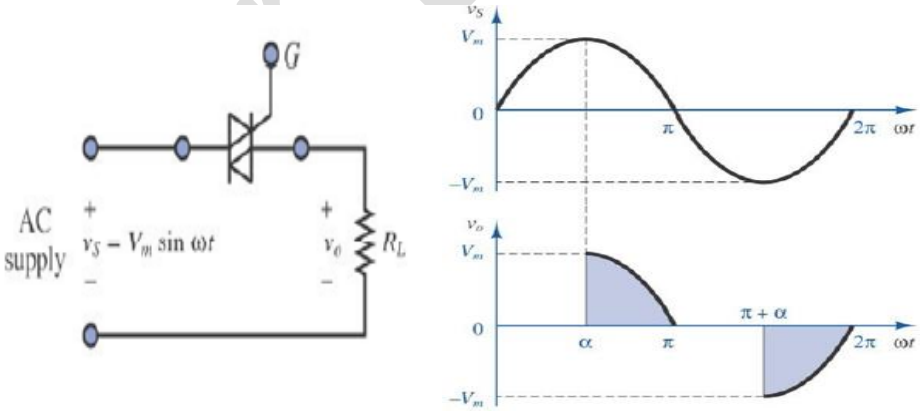

2. ***Light Dimer*** *دائرة معتم الضوء*

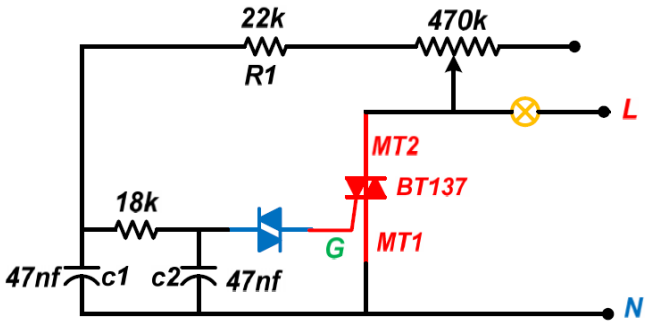

3. Speed Control of The AC Motor by Using Triac

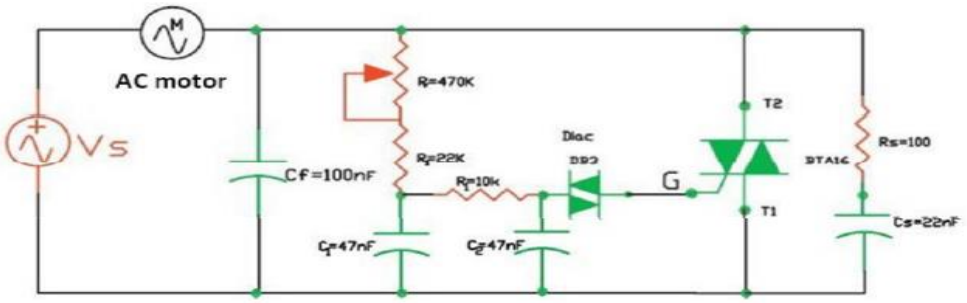

C1, C2 ➡ used for charging in +ve and _ve cycle of supply voltage.
Rf ➡ indicate the firing angle
Cf ➡ filter
Rs, Cs ➡ For damping

الاختبار البعدي

1. ***Draw the speed control of the ac motor circuit by using triac .***
2. ***Draw the Light Dimer circuit***

Power Electronics