جامعة الفرات الاوسط التقنية
المعهد التقني سماوة
قسم التقنيات الكهربائية

المحاضرة الخامسة

POWER ELECTRONICS

المرحلة الثانية

2023 - 2022

ازدهار ياسر محسن

الاختبار القبلي

- *For the circuit shown below what is the value of RB, Cs .*

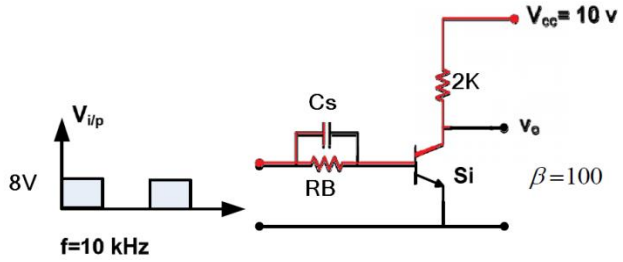

- *Defind the Rise time, delay time for the transistor, how we can be reduced them.*

Time Improvement
تحسين زمن التوصيل

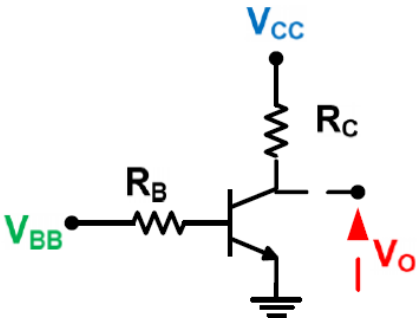

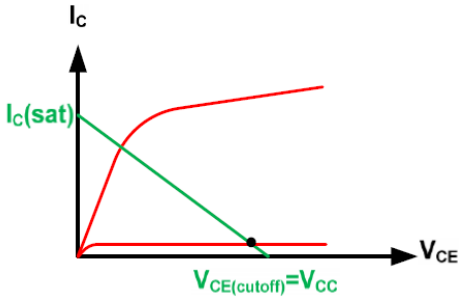

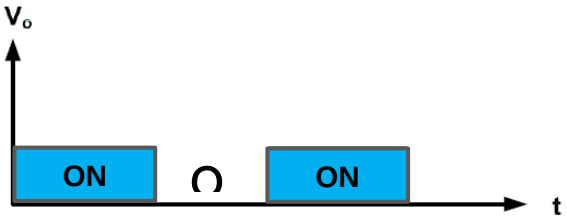

At Off state Vo = Vcc , Ic = 0

At ON state Vo = 0 , Ic = Vcc/ Rc

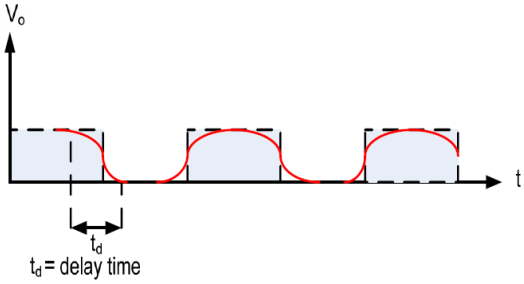

Ideal case

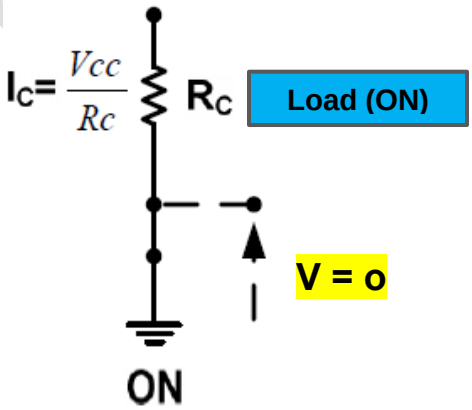

normally case

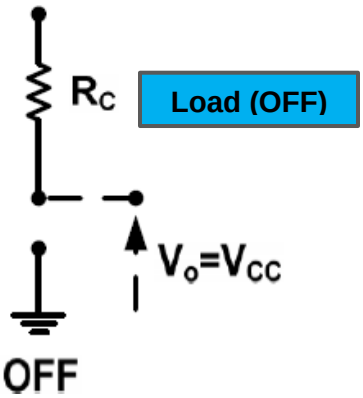

Transistor turn times

Transistor switching time (timing) It mean that study the transistor be hiver when it turn from stat to another stat as switching for example the following circuit :

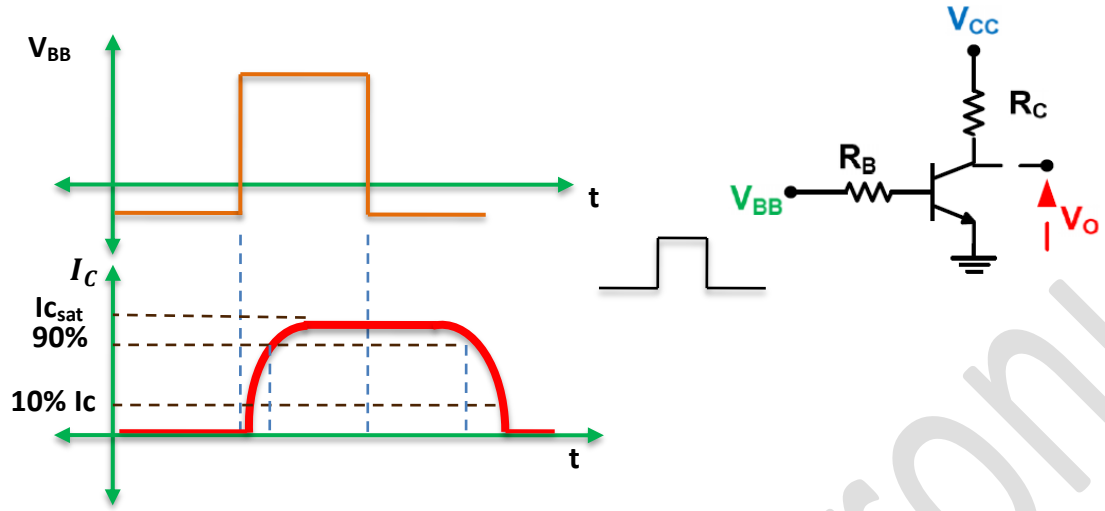

1. t_d : *the time recurred to the collector current to reach 10% from saturation current (Ic_{sat}).*
2. t_r : *the time recurred to collector current for change from 10% to 90% from (Ic_{sat}).*
3. t_s : *the time that calculated from the moment that the voltage change from +v to –v and 90%Ic_{sat} .* $t_s=t_{s1}+t_{s2}$
4. t_f : *the time calculated from 90% to10%Ic_{sat}.* $t_{on} = t_d + t_r$ $t_{off} = t_s + t_f$

Turn time improvement

For gating on desire time to ON or OFF we have to reduce the storage time (t_s) by using speed up capacitor to remove all charge on the base $C_S = \frac{Q_t}{V}$

The relation between input voltage and input current shown in the circuit below:

Practical circuit

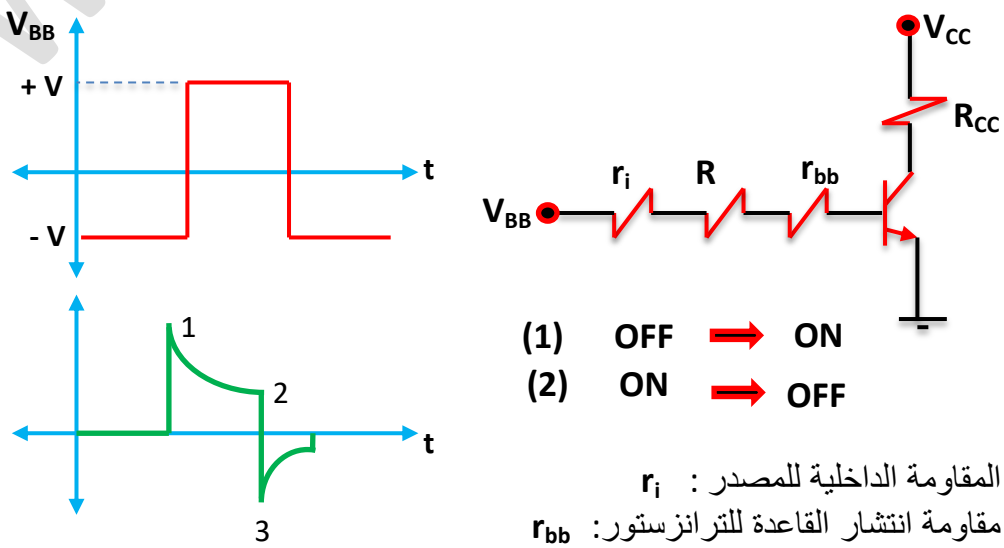

r_i : المقاومة الداخلية للمصدر

r_{bb} :مقاومة انتشار القاعدة للترانزستور

POWER Electronics

Base current calculation

1. IB before capacity connection we can apply this equation: $I_B = \frac{I_C}{\beta} = \frac{V_{CC}-V_{CE}}{\beta R_C}$
2. IB after capacity connection
   a. Point (1)..... When turn from OFF to ON $I_B = \frac{V_{BB}}{R_S}$
   b. Point (2)..... When turn from ON to OFF $I_{BB} = \frac{V_{BB}}{R_S+R_B}$
   c. Point (3)..... $I_B = \frac{-V * R_B}{(R_S+R_B)R_S}$

Speed capacity calculation(Cs) :

$$\frac{Q_t}{2V_{BB}(P-P)} \leq Cs \leq \frac{t_P}{5R_B}$$

Where Q_t : the all charge on the transistor.
V_{BB} : the input voltage ,(peak to peak) .
t_P : the half of input waveform time .

Examples

EX 1

Find the Speed up Capacitance value which make the Rise time change from 20msec to 10msec .

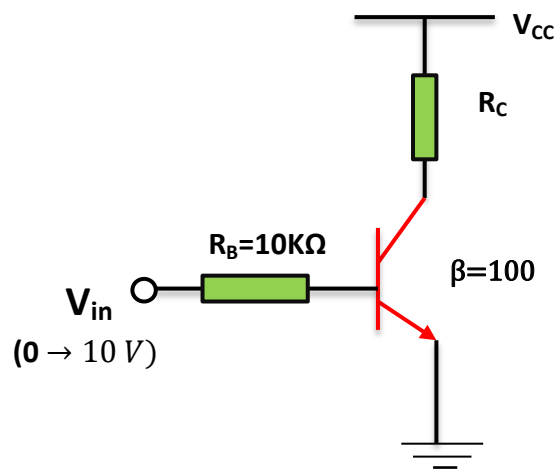

Sol:

I_B before capacity connection:

$$I_B = \frac{Vin-VBE}{RB} = \frac{10-0.7}{10*10^3} = 9.3mA$$

If t_r decrease from 20ms to 1oms
Then I_B increased from 9.3mA to 2*9.3mA
(Inverse proportional)

$$Cs = \frac{Q}{V} \quad \therefore \quad Q = Cs * Vin \quad \ldots\ldots 1$$

$$I_B = \frac{Q}{t} \quad \therefore \quad Q = I_B * t \quad \ldots\ldots\ldots 2$$

$$\because Q = Q \quad \therefore \quad equ\ 1 = equ\ 2$$

$$Cs * Vin = I_B * t$$

$$\therefore Cs = \frac{I_{B2}*t_2}{Vin} = \frac{2*9.3*10^{-3}*10*10^{-3}}{10} = 18.6\mu F$$

Power Electronics

EX 2

For the circuit shown below ,find R_B and C_s.

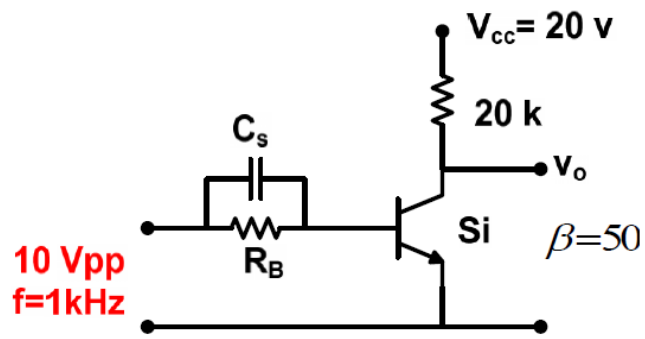

Sol:-

$$R_B = \frac{V_{in} - V_{BE}}{I_B}$$

$$I_B = \frac{Ic}{\beta} = \frac{Vcc-VCE}{\beta Rc} = \frac{20-0}{50*20*10^3} \quad = 20\,\mu A$$

$$R_B = \frac{5-0.7}{20*10^{-6}} = 215K\Omega$$

$$Cs = \frac{tp}{5RB}$$

$$tp = \frac{T}{2} \qquad T = \frac{1}{f} = \frac{1}{1*10^3} = 1ms \qquad \therefore tp = 0.5ms$$

$$Cs = \frac{0.5*10^{-3}}{5*215*10^{-3}} = 0.465\mu F$$

Home work

For the following circuit calculate

1- I_B without speed up capacitor.

2- I_B after connected speed capacitor and when turn from ON to OFF.

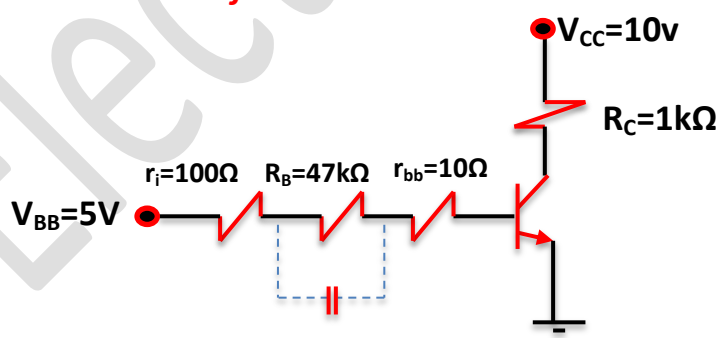

الاختبار البعدي

- *the transistor shown in the circuit below is specified to have β=50 find the value of RB that results in saturation with an over drive factor of (5).*

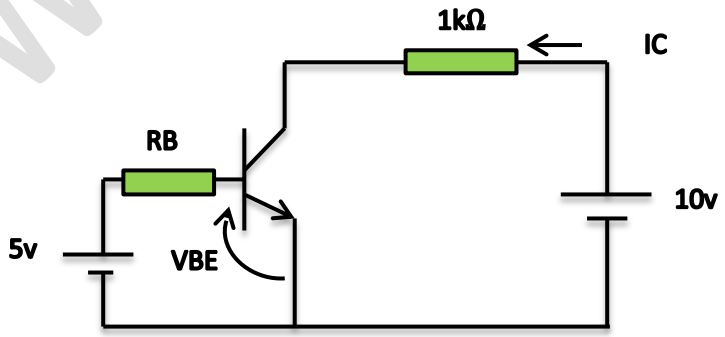

- *A transistor switch circuit has the following specification :*

  V_{cc} =5v , $\beta_{d.c}$ = 25 , R_L= 750 Ω , V_{BE}(on)= 0.7V, R_B =10KΩ , V_{CE} = 0.4V.

  Find the minimum in put voltage necessary to operate the transistor in the saturation region .

Power Electronics