جامعة الفرات الاوسط التقنية

المعهد التقني سماوة

قسم التقنيات الكهربائية

المحاضرة الاولى

POWER ELECTRONICS

المرحلة الثانية

2023 – 2022

ازدهار ياسر محسن

Power Electronic Elements

الاختبار القبلي

- *Draw the symbol and V-I curve for the following :-*
- *Diode*
- *BJT transistor*
- *MOS_ feet transistor*

Power Electronic system

The major components of a power electronic system are shown in the form of a block diagram:

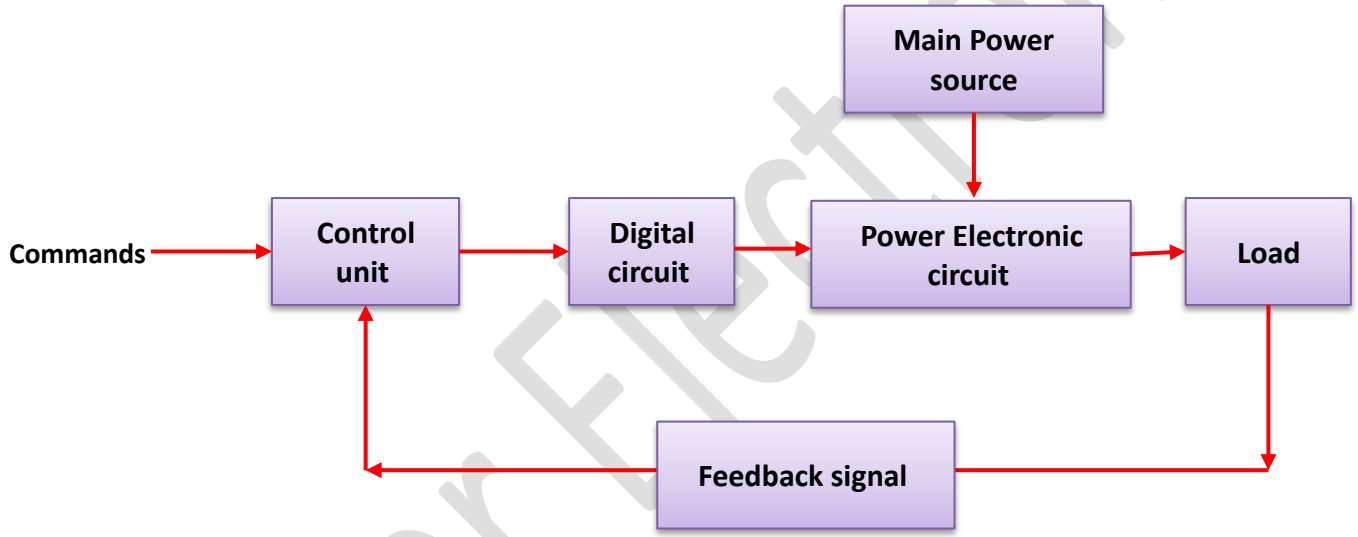

Main power source may be AC supply system or DC supply system .The output form the power electronic circuit may be variable DC, or AC voltage, or it may be a variable voltage and frequency. In general; the output of power electronic convertor circuit depends upon the requirements of the load. For example, if the load is DC motor, the converter output must be adjustable direct voltage. In case the load is 3 – phase induction motor, the converter may have adjustable voltage and frequency at its output terminals.

Advantages and disadvantages of power electronic system

The advantages possessed by power electronic system are as under:

- ***High efficiency due to low loss in power – semiconductor devices.***
- ***High reliability of power – electronic converter system.***

Power Electronics

- ***Long life and less maintenance due to the absence of any moving parts.***
- ***Fast dynamic response of the power–electronic system as compared to electromechanical converter systems.***
- ***Small size and less weigh result in less floor space and therefore lower installation cost.***
- ***Mass production of power-semiconductor devices has resulted in lower cost of the converter equipment.***

Systems based on power electronics, however, suffer from the following disadvantages:

- ***Power-electronic converter circuits have a tendency to generated harmonics in the supply system as well as in the load circuit.***
- ***Ac to dc and ac to ac converters operate at a low input power factor under certain operating conditions. In order to avoid a low pf , some special measures have to be adopted .***
- ***Power-electronic controllers have low overload capacity. These converters must, therefore, be rated for taking momentary overloads. As such, cost of power electronic controller may increase.***
- ***Regeneration of power is difficult in power electronic converter system.***

Power electronic element

The significance of this subject is evident through machines control and industrial processes by using electronics for its great uses in industry. It is widely used in controlling electric motors, and welding machines, lighting control, manufacturing lines, fire alarm system, burglars alarm system and computer aided manufacturing system …etc.

Power semiconductor devices constitute the heart of modern power electronic apparatus. They are used in power electronic convertors.

Today's power semiconductor devices are almost exclusively based on silicon materials and can be classified as follows:

- ***Diodes.***
- ***thyristor or silicon controlled rectifiers (SCR) .***
- ***3-Triac and Diac.***
- ***Gate turn –off thyristor (GTO).***
- ***Bipolar junction transistor (BJT).***
- ***Mos –controlled thyristor. And other devices.***

Power Electronics

Types of power electronic converters

A power electronic system consists of one or more power electronic converters. A power electronic converter is made up of some power semiconductor devices controlled by integrated circuit .the switching characteristics of power semiconductor devices permit a power electronic converter to shape the input power of one form to output power of some other form. Static power converters perform these functions of power conversion very efficiency. Broadly speaking; power electronic converters (or circuit) can be classified into six types as under:

- *Diode rectifiers.*
- *Static switches.*
- *AC to DC converters (phase – controlled rectifier).*
- *DC to DC converters (DC choppers).*
- *DC to AC converters (inverters).*
- *AC to AC converters :*
  - *AC voltage controllers (AC voltage regulators).*
  - *cycloconverters*

Chapter one

1- Power diodes

It is provide uncontrolled rectification of power and are used in applications such as electroplating, battery charging, welding, power supplies, freewheeling, and so on. It is mad in different Shapes, sizes and different rating. Choose these diodes it is important to take: -P.I.V {Peak.Inverse.Voltage} forward current and maximum temperature in to account.

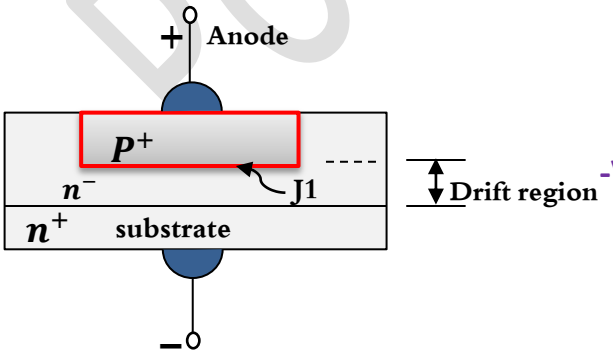

Constriction

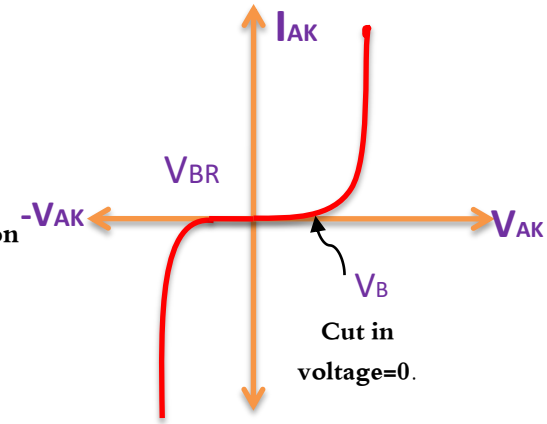

V-I curve

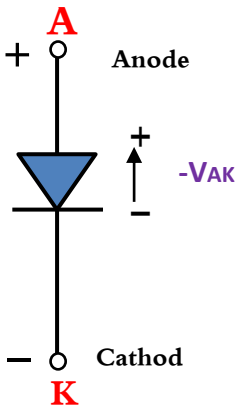

Symbol

Power Electronics

Uncontrolled Rectifiers Circuit (Diode)

❖ Single Phase Rectifier

A- Half Wave

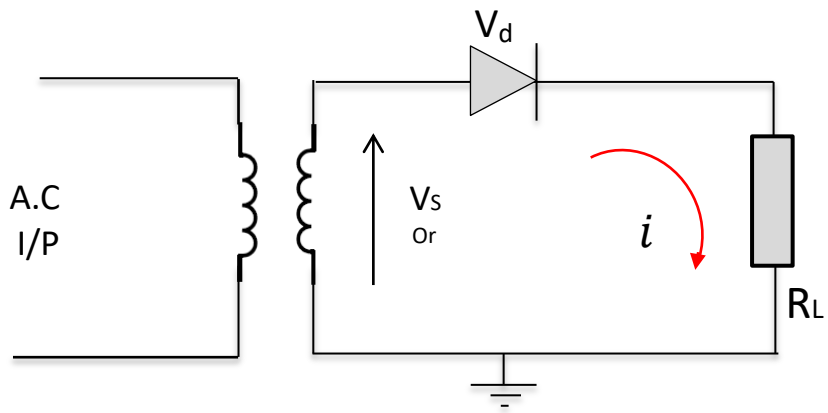

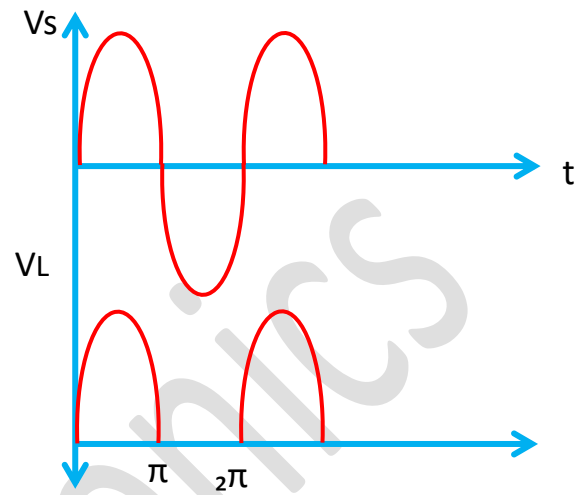

$V_{in} = V_s$

$V_{in} = V_m \sin \omega t$

Where $\omega = 2\pi f$ (angular frequency)

V_m= peak voltage on secondary coil

f=frequency (Hz)

Using Kirchhoff's low for the circuit shown above:

$$i = \frac{Vin}{(r_D + R_L)}$$ *r_D= forward diode resistance*

$$i = \frac{Vm \sin \omega t}{(r_D + R_L)}$$

$i = I_m \sin \omega t$

#The DC component of rectifier:

$$I_{dc} = \frac{1}{T}\int_0^T I(\theta)\, d\theta$$

$$I_{dc} = \frac{1}{2\pi}\left[\int_0^{2\pi} I(\theta)\, d\theta\right]$$

$$= \frac{1}{2\pi}\left[\int_0^{\pi} I_m \sin\theta\, d\theta + \int_{\pi}^{2\pi} 0 d\theta\right]$$

$$= \frac{I_m}{2\pi}\left[\int_0^{\pi} \sin\theta\, d\theta\right]$$

$$= \frac{I_m}{2\pi}[-\cos\theta]$$

$$= \frac{I_m}{2\pi}[-\cos\pi - (-\cos 0)]$$

$$= \frac{I_m}{2\pi} * 2$$

$$\boxed{I_{dc} = \frac{I_m}{\pi}}$$ ..... *equ.* **(1)**

Power Electronics

#The RMS component calculation:

$$I_{rms} = \sqrt{\frac{1}{T}\int_0^T i^2 d\theta}$$

$$= \left[\frac{1}{2\pi}\int_0^{\pi} I_m{}^2 \sin\theta^2 \, d\theta\right]^{\frac{1}{2}}$$

$$= \left[\frac{I_m{}^2}{2\pi}\int_0^{\pi} \frac{1-\cos 2\theta}{2} d\theta\right]^{\frac{1}{2}}$$

$$= \left[\frac{I_m{}^2}{2\pi} * \frac{1}{2}\left[\theta - \frac{1}{2}\sin 2\theta\right]\right]^{\frac{1}{2}}$$

$$= \left[\frac{I_m{}^2}{4\pi}\left\{(\pi - 0) - \frac{1}{2}(\sin 2\pi - \sin 2 * 0)\right\}\right]^{\frac{1}{2}}$$

$$= \left[\frac{I_m{}^2}{4\pi}\pi\right]^{\frac{1}{2}}$$

$$\boxed{I_{rms} = \frac{I_m}{2}}$$ ..... equ. **(2)**

The load voltage :- $v_o = i_o * R_L$

$$v_o = I_m \sin\theta * R_L$$

$$v_o = V_m \sin\theta$$

P.I.V :- is the Peak Inverse Voltage and its defined as (the maximum voltage during reverse bias condition). It is important to note that PIV be less than diode break down voltage.

Rectifier Efficiency (ζ) : is defined as the ratio of d.c load power to the total power input to the rectifier ;

$$\zeta = \frac{I_{dc}{}^2 R_L}{I_{rms}{}^2 (r_D + R_L)}$$

Where : $r_D = diode\ forward\ resistance$

Referring to equation (1) and (2) :

$$\zeta = \frac{\left(\frac{I_m{}^2}{\pi}\right) R_L}{\left(\frac{I_m{}^2}{2}\right)(r_D + R_L)}$$

$$\zeta = \frac{4R_L}{\pi^2 (r_D + R_L)}$$

Ideally r_D is zero therefor ζ is maximum and does not depend on load resistance

$$\zeta = \frac{4}{\pi^2} = 0.405 = 40.5\%$$

Ripple factor (r): - It is the ratio of change in R.M.S voltage component to the D.C voltage component.or it is the ratio of change in R.M.S current component to the D.C current component.

voltage ripple $r_v = \frac{\Delta V_{rms}}{V_{dc}}$ ***current ripple*** $r_i = \frac{\Delta I_{rms}}{I_{dc}}$

Power Electronics

For H.W Rectifier

$$I_{dc} = \frac{I_m}{\pi}$$

$$I_{rms} = \frac{I_m}{2}$$

$$P.I.V = Vm$$

$$\zeta = 40.5\%$$
$$r = 1.21 = 121\%$$
$$f_{out} = 50\ Hz$$

Ripple factor $(r) = \sqrt{\left(\frac{V_{rms}}{V_{dc}}\right)^2 - 1}$

$$r = \sqrt{\frac{\left(\frac{V_m}{2}\right)^2}{\left(\frac{V_m}{\pi}\right)^2} - 1}$$

$$r = 1.21 = 121\%$$

Out Put Frequency (f_{out}) =input frequency (f_{in})

Example - 1: -

A single-phase half-wave diode rectifier is designed to supply dc output voltage of 230 V to a load of R =10Ω. Calculate the rating of diode and transformer for this circuit arrangement.

Solution:-

V_{dc}=230 V

$$V_{dc} = \frac{Vm}{\pi} = 230$$

$$Vm = 3.14 * 230 = 722.63\ V$$

PIV=722.6 V

$$Im = \frac{Vm}{R_L} = \frac{722.6}{10} = 72.26\ A$$

$$I_{dc} = \frac{V_{dc}}{R_L} = \frac{230}{10} = 23\ A$$

Example- 2 :-

A load of R=60Ω is fed from 1-phase, 230 V, 50 Hz supply through a step-up transformer and then one diode. The transformer turns ratio is two. Find the output DC power.

Solution:

The half-wave diode rectifier uses a step-up transformer therefore, ac voltage applied to rectifier =230*2=460 V= Vs

$$Vo = \frac{Vm}{\pi} = \frac{\sqrt{2}*460}{\pi} = 207.04\ V$$

$$P_{dc} = \frac{Vdc^2}{R} = \frac{207.04^2}{60} = 714.43\ W$$

الاختبار البعدي

- ***Drive an equation to calculate the R.M.S voltage component for single phase full wave rectifier.***
- ***Calculate the ripple factor and power energy conversion for half wave rectifier .***
- ***For a single – phase half – wave diode rectifier feeding a resistive load R, find the values of rectifier efficiency, form factor, voltage ripple factor .in terms of Vm .***

Power Electronics