جامعة الفرات الاوسط التقنية
المعهد التقني سماوة
قسم التقنيات الكهربائية

المحاضرة الرابعة والخامسة عشر

POWER ELECTRONICS

المرحلة الثانية

2023 – 2022

ازدهار ياسر محسن

الاختبار القبلي

- *Write equation to calculate the D.C component for 1- phase half wave .*
- *Write equation to calculate the R.M.S component for 1- phase half wave .*
- *Write equation to calculate the D.C component for 3- phase half wave .*
- *Write equation to calculate the R.M.S component for 3- phase half wave.*

Thyristor Application
تطبيقات الثايرستور

➢ ***The application of the Thyrister family (Thyrister general Application)***

1. *Convert the A.C power to D.C power as a converter.*
2. *Transform the D.C power to A.C power as Inverter.*
3. *Transform the D.C power D.C power as chopper.*
4. *4 – speed control of A.C and D.C motor*
5. *Uninterruptible power supplies for important application such as computer.*
6. *Induction heating.*

1. *AC to DC* ***Convertor:***

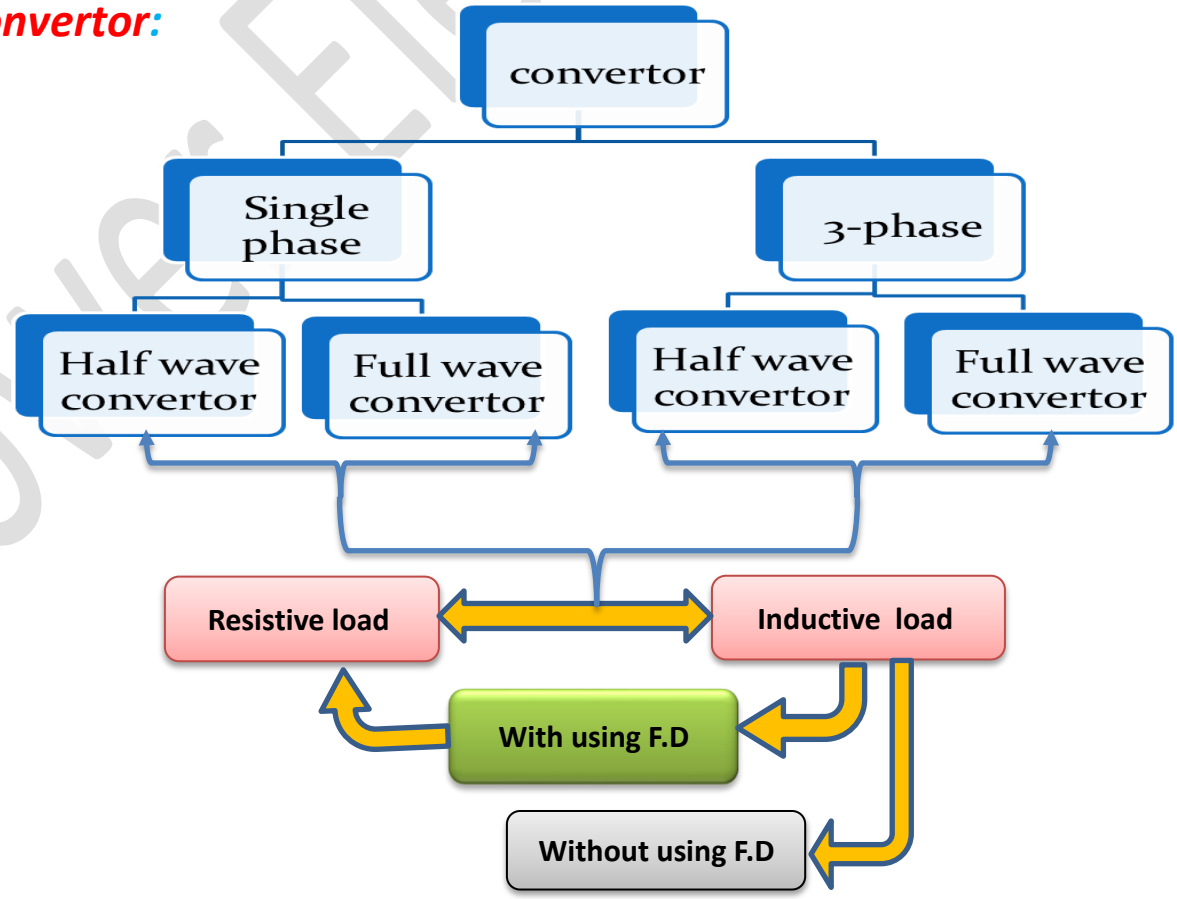

Power Electronics

❖ *single phase converter*

i) Half wave converter

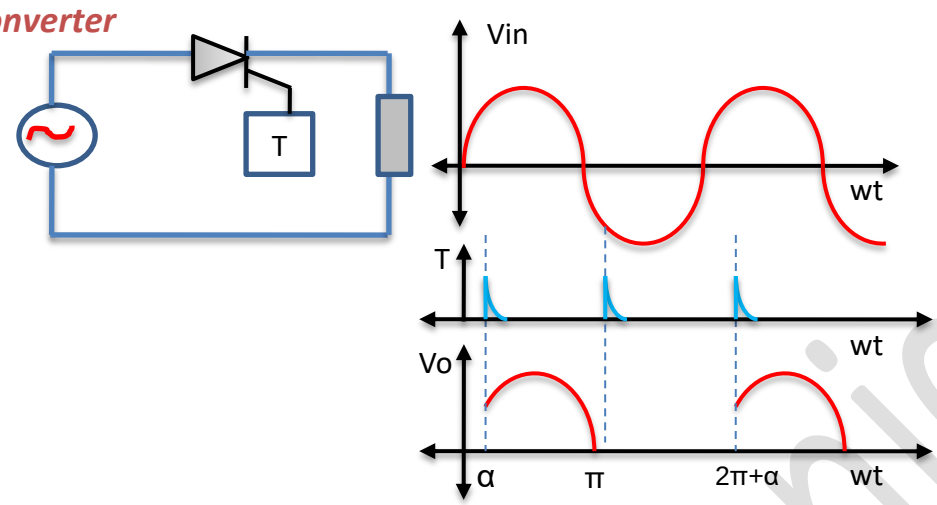

*D.C Component Calculation

to calculate the d.c component we applying the following equation :

$$V_{dc} = \frac{1}{T}\int_0^T V(\theta)\, d\theta$$

$$V_{dc} = \frac{1}{2\pi}\left[\int_\alpha^\pi V(\theta)\, d\theta + \int_\pi^{2\pi} 0 d\theta\right]$$

$$= \frac{1}{2\pi}\left[\int_\alpha^\pi V_m \sin\theta\, d\theta\right]$$

$$= \frac{V_m}{2\pi}\left[\int_\alpha^\pi \sin\theta\, d\theta\right]$$

$$= \frac{V_m}{2\pi}[-\cos\theta]$$

$$= \frac{V_m}{2\pi}[-\cos\pi - (-\cos\alpha)]$$

$$= \frac{V_m}{2\pi}[1 + \cos\alpha]$$

$$\boxed{V_{dc} = \frac{V_m}{2\pi}[1 + \cos\alpha]}$$

*R.M.S Component Calculation

$$V_{RMS} = \left[\frac{1}{2\pi}\int_0^{2\pi}(V_m \sin\theta)^2\, d\theta\right]^{\frac{1}{2}}$$

$$= \left[\frac{V_m{}^2}{2\pi}\int_\alpha^\pi \sin\theta^2\, d\theta\right]^{\frac{1}{2}}$$

$$= \left[\frac{V_m{}^2}{2\pi}\int_\alpha^\pi \frac{1-\cos 2\theta}{2}\, d\theta\right]^{\frac{1}{2}}$$

$$= \left[\frac{V_m{}^2}{4\pi}\int_\alpha^\pi (1-\cos 2\theta) d\theta\right]^{\frac{1}{2}}$$

$$= \left[\frac{V_m{}^2}{4\pi}\left\{\theta - \frac{\sin 2\theta}{2}\right\}\right]^{\frac{1}{2}}$$

$$= \left[\frac{V_m{}^2}{4\pi}\left\{(\pi-\alpha) - \frac{\sin 2\pi - \sin\alpha}{2}\right\}\right]^{\frac{1}{2}}$$

$$\boxed{V_{rms} = \frac{V_m}{2}\left[\frac{\pi - \alpha + \frac{1}{2}\sin 2\alpha}{\pi}\right]^{\frac{1}{2}}}$$

Power Electronics

ii) Full wave converter

Bridge Convertor

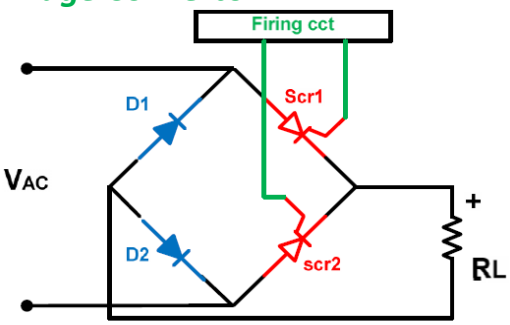

Half controller

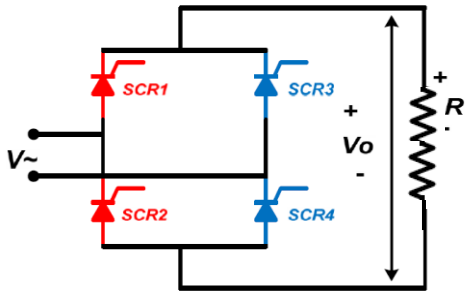

full controller

Center Tap Transformer

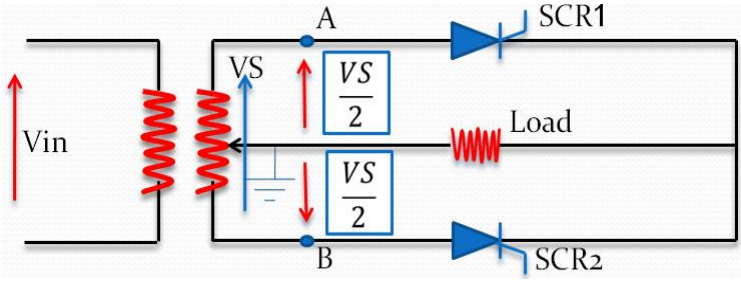

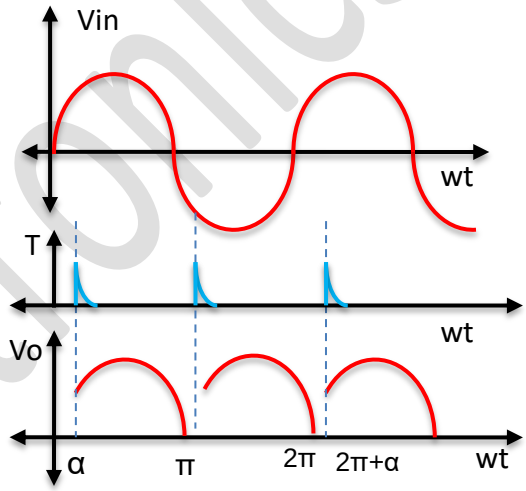

*D.C Component Calculation

To calculate the d.c component we applying the following equation:

$$V_{dc} = \frac{1}{T}\int_0^T V(\theta)\, d\theta$$
$$= \frac{1}{\pi}\left[\int_\alpha^\pi V_m \sin\theta\, d\theta\right]$$
$$= \frac{V_m}{\pi}\left[\int_\alpha^\pi \sin\theta\, d\theta\right]$$
$$= \frac{V_m}{\pi}[-\cos\theta]$$
$$= \frac{V_m}{\pi}[-\cos\pi - (-\cos\alpha)]$$
$$= \frac{V_m}{\pi}[1+\cos\alpha]$$

$$\boxed{V_{dc} = \frac{V_m}{\pi}[1+\cos\alpha]}$$

*R.M.S Component Calculation

$$V_{RMS} = \left[\frac{1}{\pi}\int_\alpha^\pi (V_m \sin\theta)^2\, d\theta\right]^{\frac{1}{2}}$$
$$= \left[\frac{{V_m}^2}{\pi}\int_\alpha^\pi \sin\theta^2\, d\theta\right]^{\frac{1}{2}}$$
$$= \left[\frac{{V_m}^2}{\pi}\int_\alpha^\pi \frac{1-\cos 2\theta}{2}\, d\theta\right]^{\frac{1}{2}}$$

Power Electronics

$$= \left[\frac{V_m^2}{2\pi}\int_{\alpha}^{\pi}(1-\cos 2\theta)d\theta\right]^{\frac{1}{2}}$$

$$= \left[\frac{V_m^2}{2\pi}\left\{\theta - \frac{\sin 2\theta}{2}\right\}\right]^{\frac{1}{2}}$$

$$= \left[\frac{V_m^2}{2\pi}\left\{(\pi-\alpha) - \frac{\sin 2\pi - \sin\alpha}{2}\right\}\right]^{\frac{1}{2}}$$

$$V_{rms} = \frac{V_m}{\sqrt{2}}\left[\frac{\pi - \alpha + \frac{1}{2}\sin 2\alpha}{\pi}\right]^{\frac{1}{2}}$$

$$I_0(R.M.S) = \frac{V_o(R.M.S)}{R_L} \quad Amp$$

$$P_0(R.M.S) = \frac{[V_o(R.M.S)]^2}{R_L} \quad Watt$$

$$P_{in} = \frac{V_m}{\sqrt{2}} * I_0(R.M.S)$$

$$Power\ Factor\ (P.F) = \frac{P_0(R.M.S)}{P_{in}}$$

EX :- A heater of 10 Ω resistance (constant with temperature),if it is used with a half wave rectifier , the input voltage source is (V = 240 v) calculate at (α = π/3) .

a. ***$V_{d.c}$ of the heater .***
b. ***The power of the load .***
c. ***The power factor .***
d. ***The voltage across the thyristor (SCR).***

Solution:-

$$Vd.c = \frac{V_m}{2\pi}(1+\cos\alpha)$$

$$= \frac{\sqrt{2} * 240}{2*3.14}(1+\cos 60^\circ)$$

$$PO\ (r.m.s) = \frac{[Vo\ (r.m.s)]2}{R_L}$$

$$Vo\ (r.m.s) = \frac{V_m}{2}\sqrt{\frac{\pi-\alpha+\frac{1}{2}\sin 2\alpha}{\pi}}$$

$$Vo\ (r.m.s) = \frac{\sqrt{2} * 240}{2}\sqrt{\frac{3.14 - \frac{3.14}{3} + \frac{1}{2}\sin 120}{3.14}}$$

= 152.2 v

أما الاشكال الموجية لاشارة الدخل والخرج والشكل الموجي الذي يظهر على طرفي الثايريستور فهي مبينة بالشكل ادناه .

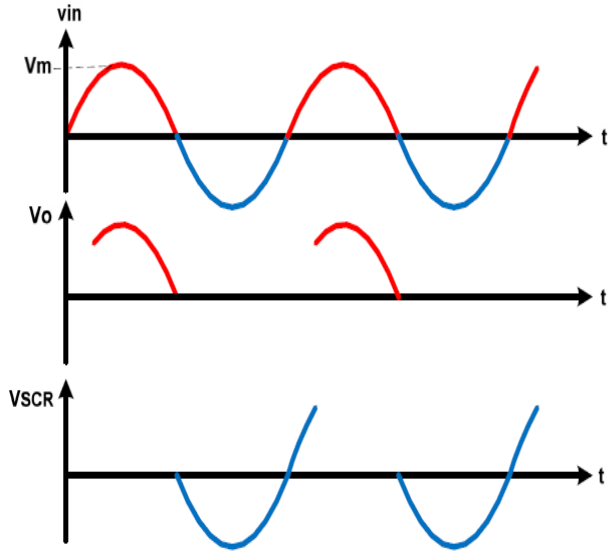

$$P.F = \frac{Po\,(r.m.s)}{Pin}$$

$$Pin\,(va) - \frac{V_m}{\sqrt{2}}\,Io\,(r.m.s)$$

$$Io\,(r.m.s) = \frac{Vo\,(r.m.s)}{R_L} = \frac{152.2}{10} = 15.22\ Amp$$

$$\therefore Pin\,(va) = 240 * \sqrt{2} * \frac{152.2}{\sqrt{2}} = 3.6528\ KW$$

$$\therefore P.F = \frac{2.316}{3.6528} = 0.634$$

$$VSCR = \frac{V_m}{2\pi}(1 - cos\alpha) = \frac{\sqrt{2} * 240}{2 * 3.14}(1 - cos\,60^\circ)$$

$$V_{SCR} = 26.7\,v$$

Half controlled full wave rectifier with (R+ l)

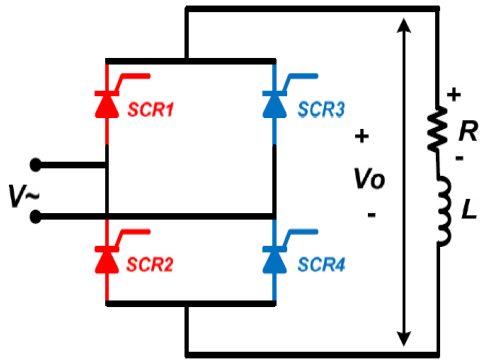

full controller

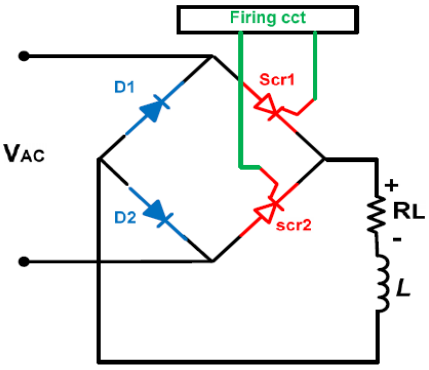

Half controller

عند وجود حمل حثي في دائرة الخرج كما في حالة تشغيل محركات التيار المستمر من مصادر التيار المتناوب باستعمال المغيرات ، فان خاصية خزن الطاقة في الملف سيجعل التيار تستمر في دائرة الحمل بعد اخماد الثايريستور عند تغير النصف الموجب للإشارة المصدر .

$$Vd.c = Vo = \frac{1}{\pi}\int_{\alpha}^{\partial} V\,d\,(wt)\ ,V = Vm\,sinwt\ ,\partial = \pi + \alpha$$

$$\therefore Vd.c = \frac{1}{\pi}\int_{\alpha}^{\pi+\alpha} Vm\,sinwt\,d\,(wt)$$

$$= \frac{Vm}{\pi}\left[-cos\,\alpha\right]_{\alpha}^{\pi+\alpha}$$

$$= \frac{Vm}{\pi}\left[-cos\,(\pi + \alpha) + cos\,\alpha\right]$$

$$\boxed{V_{dc} = 2\frac{V_m}{\pi}\cos\alpha}$$

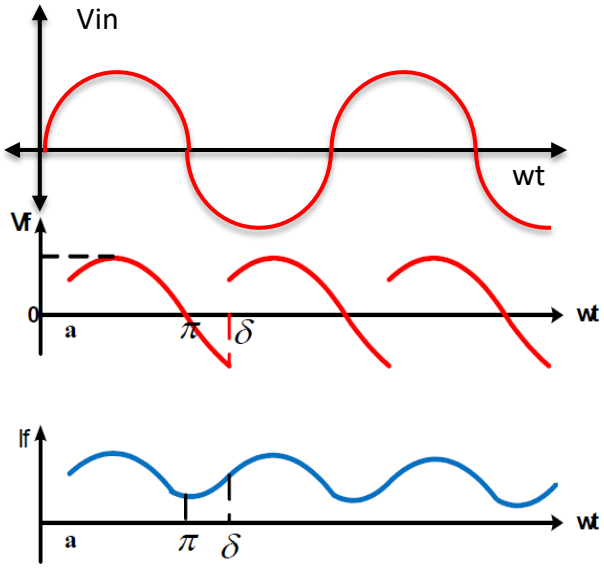

EX1:- Full wave Full controlled Converter, if you know L=50mH, R=10Ω, α=30°
V_{in}=325sin 100πt. Find The following

1. ***V_{dc}***
2. ***Load angle***

Solution:-

$$V_{dc} = 2\frac{V_m}{\pi}\cos\alpha$$

$$V_{dc} = 2\frac{325}{\pi}\cos 30 = 179.2\ v$$

$$\tan\varphi = \frac{\omega L}{R}$$

$$\varphi = \tan^{-1}\frac{100\pi * 50 * 10^{-3}}{10} = 57.5°$$

When we used freewheeling diode we can reduce the EMF effect for inductive Load as shown

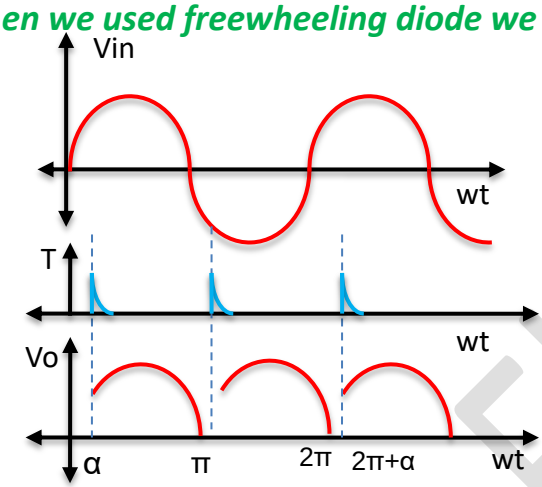

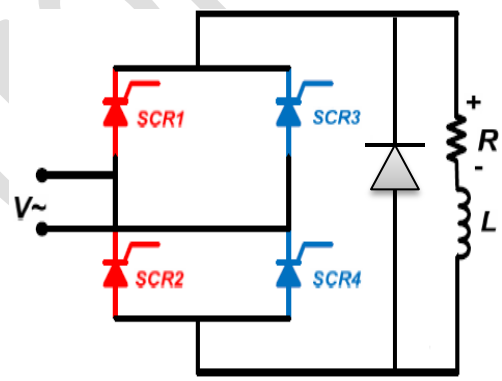

$$V_{dc} = \frac{V_m}{\pi}[1 + \cos\alpha]$$

EX2 : ***A single phase full controlled converter by using a center-tap transformer feeding a resistive-inductive load, calculate the D.c load voltage at (α =30̊) , if you Know that the transformation ratio is (2:1) and primary voltage is (240 V) when:***

1- ***With using freewheeling diode.***
2- ***Without using freewheeling diode.***

Solution:

1- ***With using freewheeling diode.***

$$V_{dc} = \frac{V_m}{\pi}[1 + \cos\alpha]$$

$$\frac{N_1}{N_2} = \frac{V_1}{V_2} \qquad \frac{2}{1} = \frac{240}{V_2} \qquad V_2 = \frac{240}{2} = 120V \qquad \therefore\ V_a = \frac{V_2}{2} = \frac{160}{2} = 60\ V\ .....\ (r.m.s)$$

$$V_{dc} = \frac{60 * \sqrt{2}}{\pi}[1 + \cos 30] = 45.66V$$

2- ***Without using freewheeling diode.***

$$V_{dc} = 2\frac{V_m}{\pi}\cos\alpha = 2\frac{60 * \sqrt{2}}{\pi}\cos\alpha 30 = 37.8\ V$$

Power Electronics

❖ Three Phase Converter:

1. Half Wave Converter

i) Continues conduction: ($\alpha \leq 30°$)

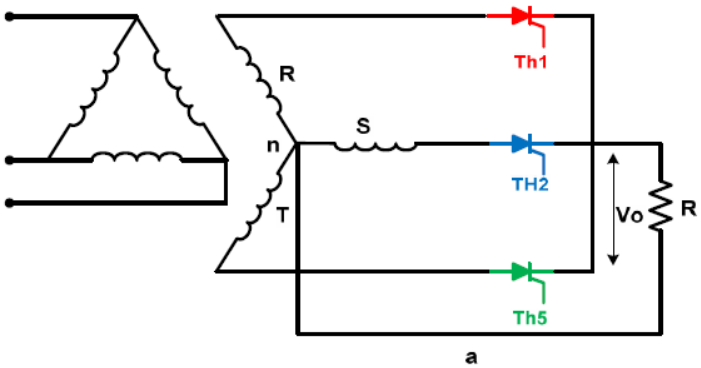

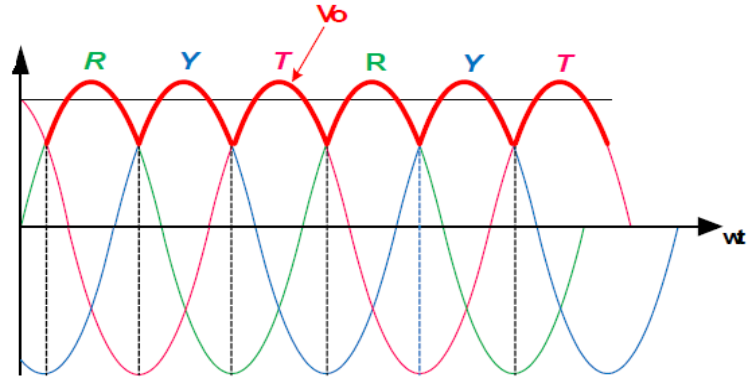

$if \ \propto \leq 30°$

$$T = \left(5\frac{\pi}{6}+\propto\right) - \left(\frac{\pi}{6}+\propto\right) = \frac{2\pi}{3}$$

$$V_{dc} = \frac{1}{T}\int_0^T v(\theta)d\theta = \frac{1}{2\pi/3}\int_{\frac{\pi}{6}+\propto}^{\frac{5\pi}{6}+\propto} Vm\sin\theta d\theta$$

$$V_{dc} = \frac{3V_m}{2\pi}[-\cos\theta \quad] \quad = \frac{3V_m}{2\pi}\left[-\cos(\frac{5\pi}{6}+\alpha) - \left(-\cos(\frac{\pi}{6}+\alpha)\right)\right]$$

$$Vo_{dc} = \frac{3\sqrt{3}V_m}{2\pi}\cos\propto$$

$$\boxed{V_{in} = V_{ph}}$$

$$\boxed{V_{dc} = 0.827V_m\cos\alpha}$$

$$\boxed{V0_{rms} = \frac{vm}{\sqrt{2}}(1+0.413\cos\propto)^{\frac{1}{2}}}$$

ii) Discontinues conduction ($\alpha > 30°$)

$$T = \frac{2\pi}{3}$$

$$V_{d.c} = \frac{1}{T}\int_0^t V(\theta)d\theta =$$

$$= \frac{3Vm}{2\pi}\int_{\frac{\pi}{6}+\alpha}^{\pi}\sin\theta\, d\theta = \frac{3V_m}{2\pi}\left[-\cos\theta\int_{\frac{\pi}{6}+\alpha}^{\pi}\right]$$

$$= \frac{3V_m}{2\pi}[1+\cos(\frac{\pi}{6}+\alpha)]$$

$$\boxed{V_{d.c} = \frac{3Vm}{2\pi}[1+\cos(\frac{\pi}{6}+\propto)]}$$

$$\boxed{V0_{rms} = \frac{Vm}{2}[2.5-\propto+\frac{3}{2\pi}\sin(\frac{\pi}{3}+2\propto)]^{\frac{1}{2}}}$$

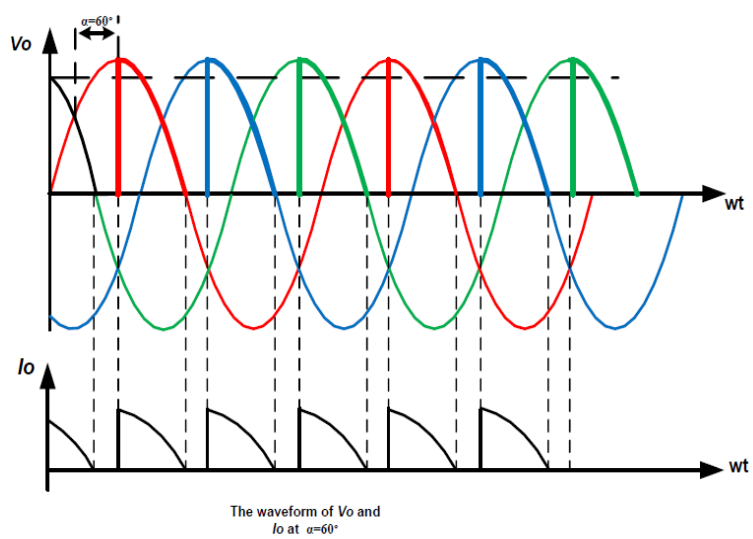

The waveform of *Vo* and *Io* at α=60°

Power Electronics

EX : A three phase half wave converter feeding a resistive load (100 ohm) if you know the source voltage is 220v calculate the D.C load voltage at an angles of firing :-

α =15, α =45, α =120

solu

1- α =15

$\therefore \quad if \quad \propto \leq 30°$

$$V_{d.c} = \frac{3\sqrt{3}V_m}{2\pi} cos \propto = \frac{3\sqrt{3}*220\sqrt{2}}{2\pi} cos\, 15 = 248.65\, v$$

2- α =45

$\therefore \quad if \quad \alpha > 30°$

$$V_{dc} = \frac{3V_m}{2\pi}[1 + cos(\frac{\pi}{6} + \alpha)] = \frac{3*220\sqrt{2}}{2*\pi}[1 + cos(30 + 45)] = 38.5v$$

3- α =120

$$V_{d.c} = \frac{3*220\sqrt{2}}{2*\pi}[1 + cos(120 + 30)] = 20v$$

2. full wave converter

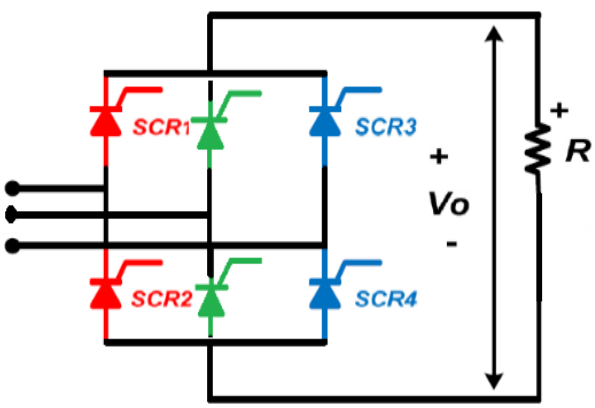

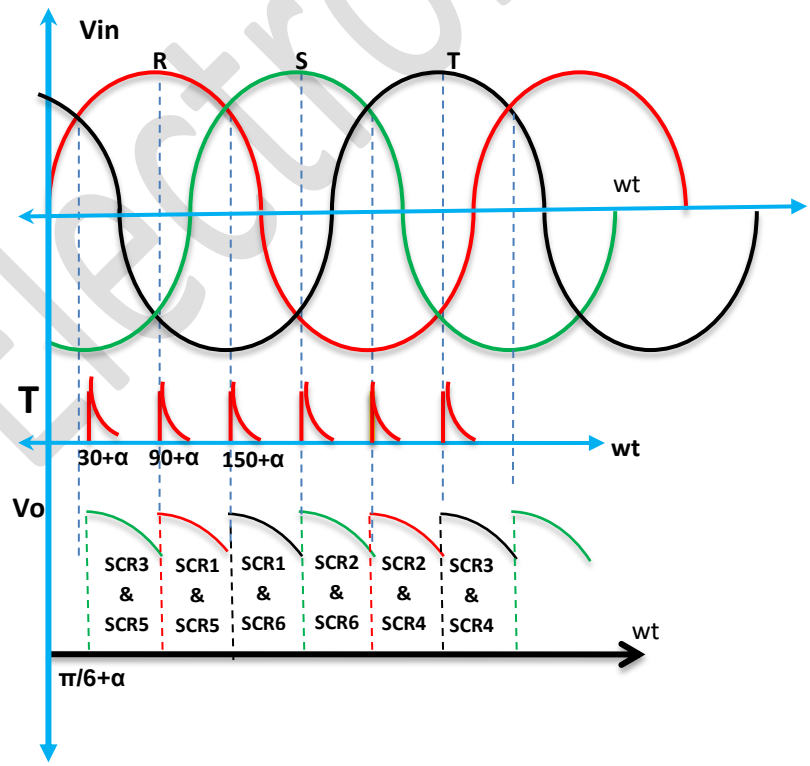

$$T = \frac{\pi}{3}$$

$$V_{d.c} = \frac{1}{T}\int_0^t V(\theta)d\theta =$$

$$V_{d.c} = \frac{1}{\frac{\pi}{3}}\int_{\frac{\pi}{6}+\alpha}^{\frac{\pi}{2}} V_m \sin\theta\, d\theta =$$

$$= \frac{3V_m}{\pi}[-\cos\theta] = \frac{3V_m}{\pi}\left[\left(-\cos\left(\frac{\pi}{2}\right)\right) - \left(-\cos\frac{\pi}{6} + \alpha\right)\right]$$

$$V_{d.c} = \frac{3V_m}{\pi}\cos\left(\frac{\pi}{6} + \alpha\right)$$

Power Electronics

الاختبار البعدي

1. *For the following input voltage draw the output for 1-F.W con. 2- H.W con if α=15 .*

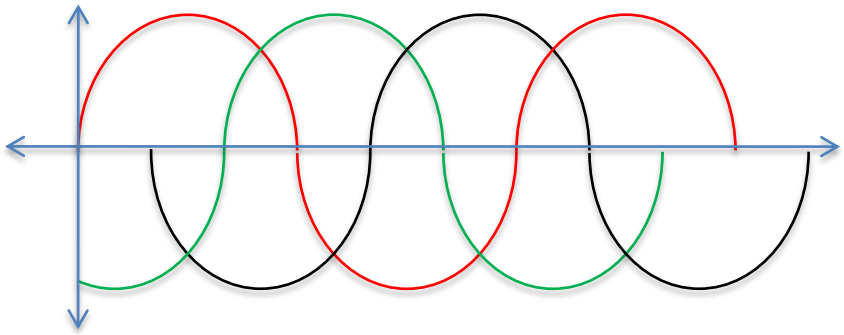

2. *Write Equation To Calculate RMS Value For 3-Phase Full Wave Below.*
3. *Three phase Bridge converter half controller feds from voltage source (400 V) Line to Line .calculate trigger angle α to supply load of (180V).*
4. *Bridge converter half controller feeds inductive load if:*

   L= 50 mH , R=12 Ω , V_b =100V α=30° V_{in}= 350$\sin 100\pi t$

   Calculate:

   a. *The average value of load voltage*
   b. *The load angle*
   c. *The power factor for the source*

Power Electronics