جامعة الفرات الاوسط التقنية /المعهد التقني سماوة

قسم / تقنيات المساحة

المحاضرة الثالثة

اسم المادة / المساحة-٢

المرحلة الدراسية / الثانية

العام الدراسي / 2022 - 2023

استاذ المادة م.م مروه عبدالهادي حسن

Calculate the Azimuth of each side of the traverse

- Perform Angle Closure
- Closure = (meas. or calc.) – (fixed or
- known)
- • Closure should meet standard of accuracy
- required for traverse specification being
- followed. See ALTA-ACSM specifications
- for boundary traverses.

Angle Closure (cont.)

- If the angle closure fails to meet the
- standard of accuracy, a gross blunder or an
- unaccounted for systematic error is
- suspected among the measurements.
- • In either case the measurement with the
- blunder or the error should be isolated and
- replaced by remeasurement before
- continuing with the calculations.

Perform Angle Adjustment

- Starting point is correction per angle.
- • C
- A= correction per angle = - Closure ÷ n
- n = number of angles
- • The C
- A should be an integer number. Use
- integer arithmetic to calculate it.

Angle Adjustment (cont.)

- Adjust for Horizon Closure or Calculate Mean Int.
- • Mean Int. = Int. + C_A

Field Angles					
Sta	Int.	Ext.	Sum	Closure	C_A
1	069°49'30"	290°12'05"			
2	083°16'55"	276°43'20"			
3	026°53'35"	333°06'15"			

Angle Adjustment (cont.)

- Field Angles

Field Angles					
Sta	Int.	Ext.	Sum	Clos	C_A
1	69° 49’ 30”	290° 12’05”	360°01’35”	+ 95”	- 48”
2	83° 16’ 55”	276°43’20”	360°00’15”	+ 15”	- 07”
3	26° 53’ 35’	333°06’15”	359°59’50”	- 10”	+ 05”

C_A = - (+95”) ÷ 2 = - 48”

C_A = - (+15”) ÷ 2 = - 07”

Angle Adjustment (cont.)

- • Mean interior = Int. + C_A

Sta.	field int.	C_A	Mean int.
1	69° 49’ 30”	- 48”	69°48’ 42”
2	83° 16’ 55”	-07”	83°16’ 48”
3	26° 53’ 35	+ 05”	26° 53’40”

Sum = 179°59’10”

Angle Adjustment (cont.)

- Calc. Adj. Int. Angle or adjust for geometric sum
- • Closure = 179° 59’ 10” – 180° 00’ 00” = - 50”
- • C_A = - (-50”) ÷ 3 (do division longhand, find
- remainder and adjust that many (remainder) angles by
- one second more ; prevents round off error)

Angle Adjustment (cont.)

- Adjusted Interior = Mean int. + C_A

Sta.	Mean int.	C_A	Adj. int.
1	69°48’ 42”	+ 17”	69°48’ 59”
2	83°16’ 48”	+ 17”	83°17’ 05”
3	26° 53’40”	+ 16”	26° 53’56”

Check Sum = 180° 00’ 00”

Calculate the Azimuth

- Key points
- •Use the adjusted or balanced angles
- •Requires knowledge of the traverse configuration or the
- direction of travel around the traverse. I.e., is the order of
- stations clockwise or counterclockwise as you proceedfrom station to station?

Calculate the Azimuth

- Key points cont.
- •Requires knowledge of different horizontal angles - int.,
- ext., deflection angle, angle-to-the-right, etc.
- •Meridians are parallel
- •Line intersecting parallel lines creates equal alternate
- interior angles (see Geometry Review)

Geometry Review

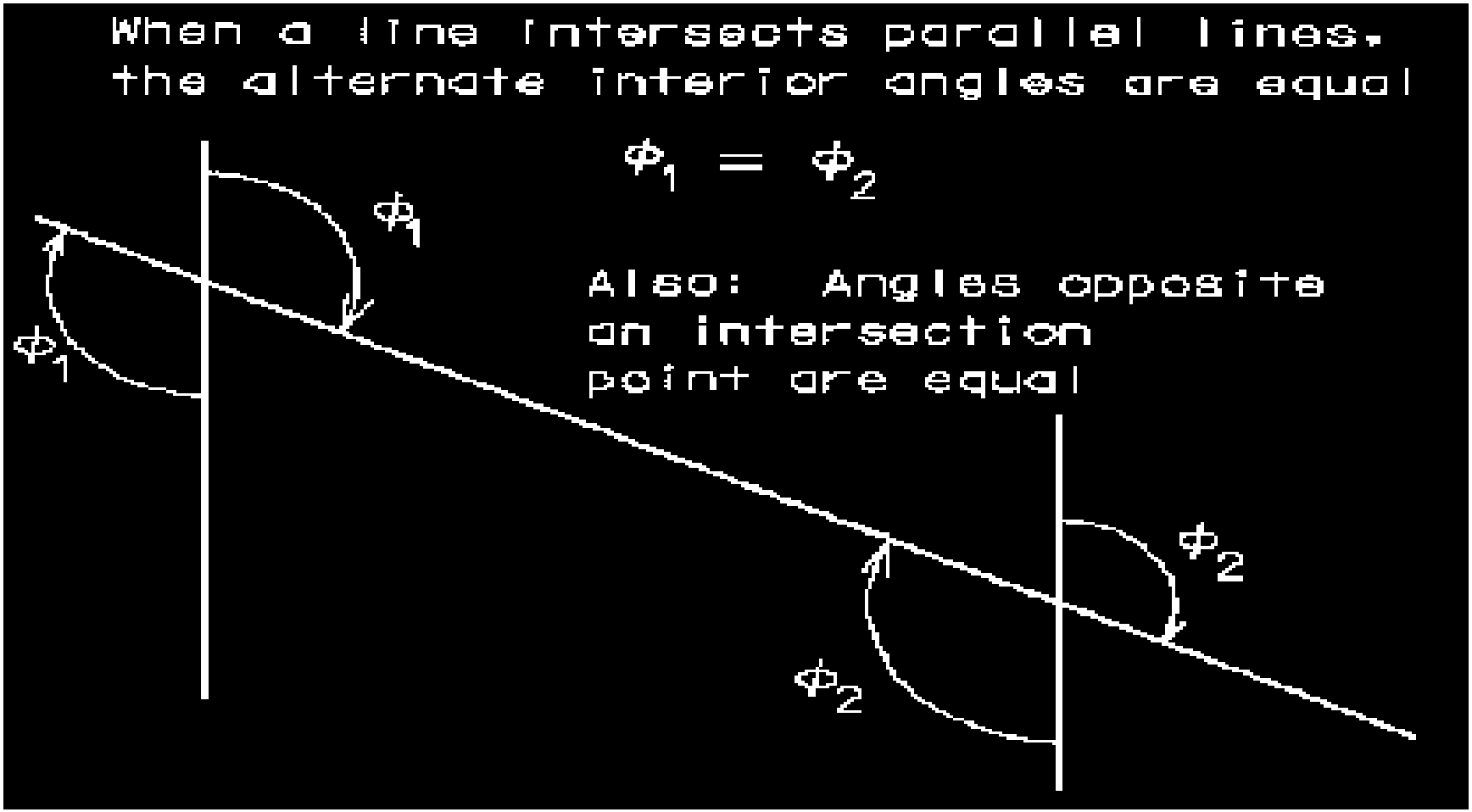

Review (cont.)

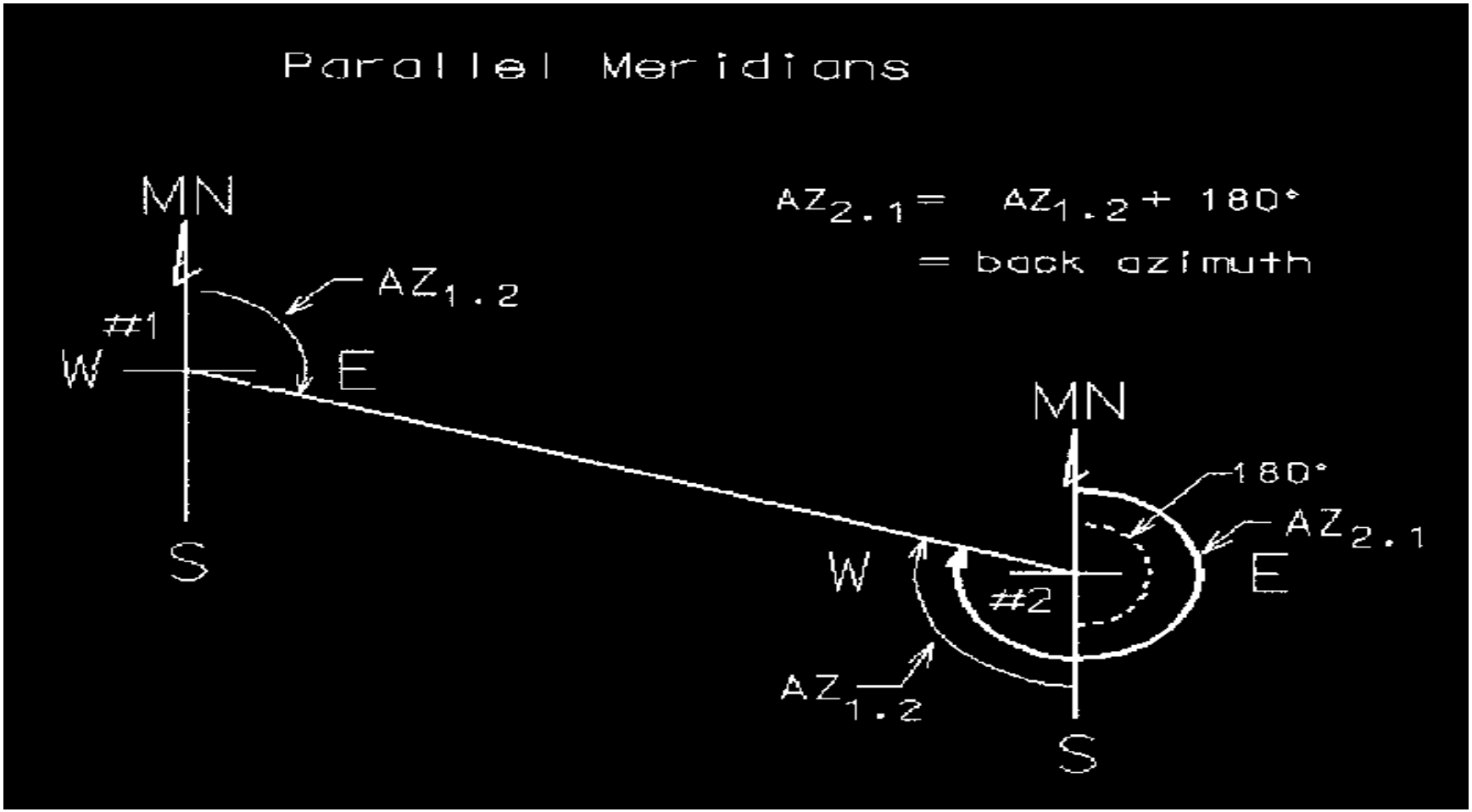
Parallel Meridians
MN
$AZ_{2.1} = AZ_{1.2} + 180°$
= back azimuth
$AZ_{1.2}$
#1
W
E
S
MN
180°
$AZ_{2.1}$
W
E
#2
$AZ_{1.2}$
S

Review (cont.)

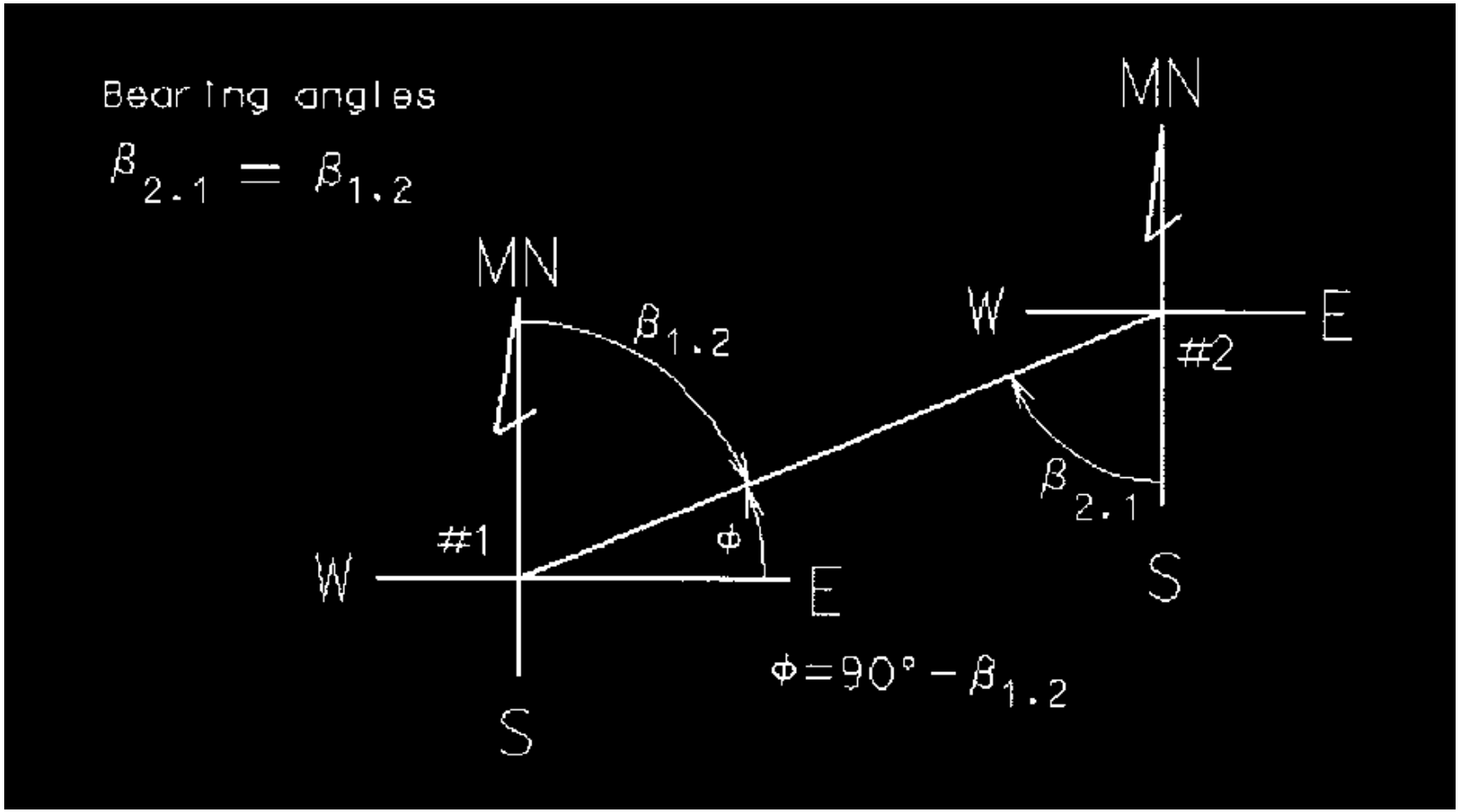
Bearing angles
$\beta_{2.1} = \beta_{1.2}$
MN
$\beta_{1.2}$
#1
W
E
S
ϕ
$\Phi = 90° - \beta_{1.2}$
MN
W
E
#2
$\beta_{2.1}$
S

Calculate the Azimuth of each side - using Adjusted Int. Angles

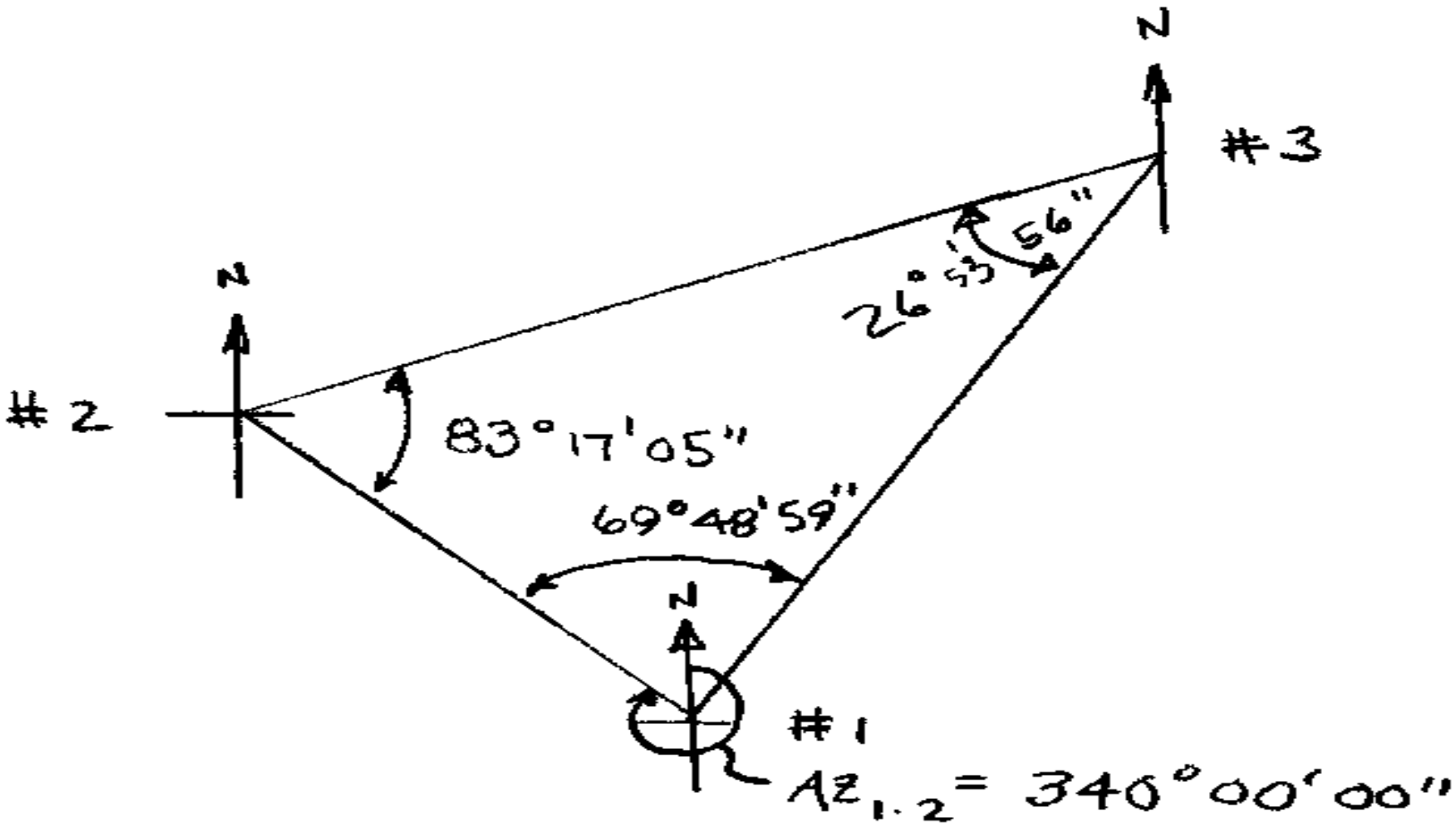

Find the Azimuth of side 2-3

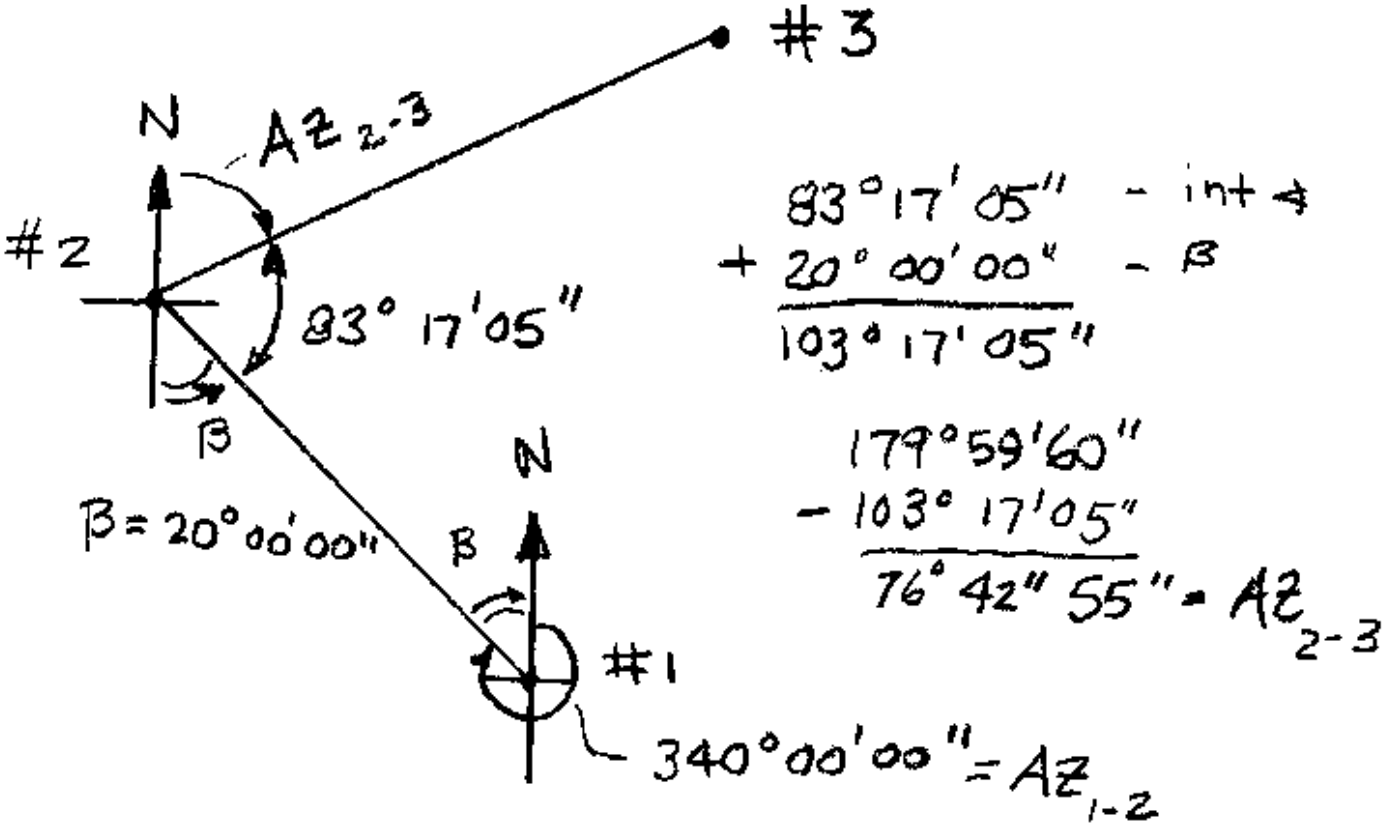

Find the Azimuth of side 3-1

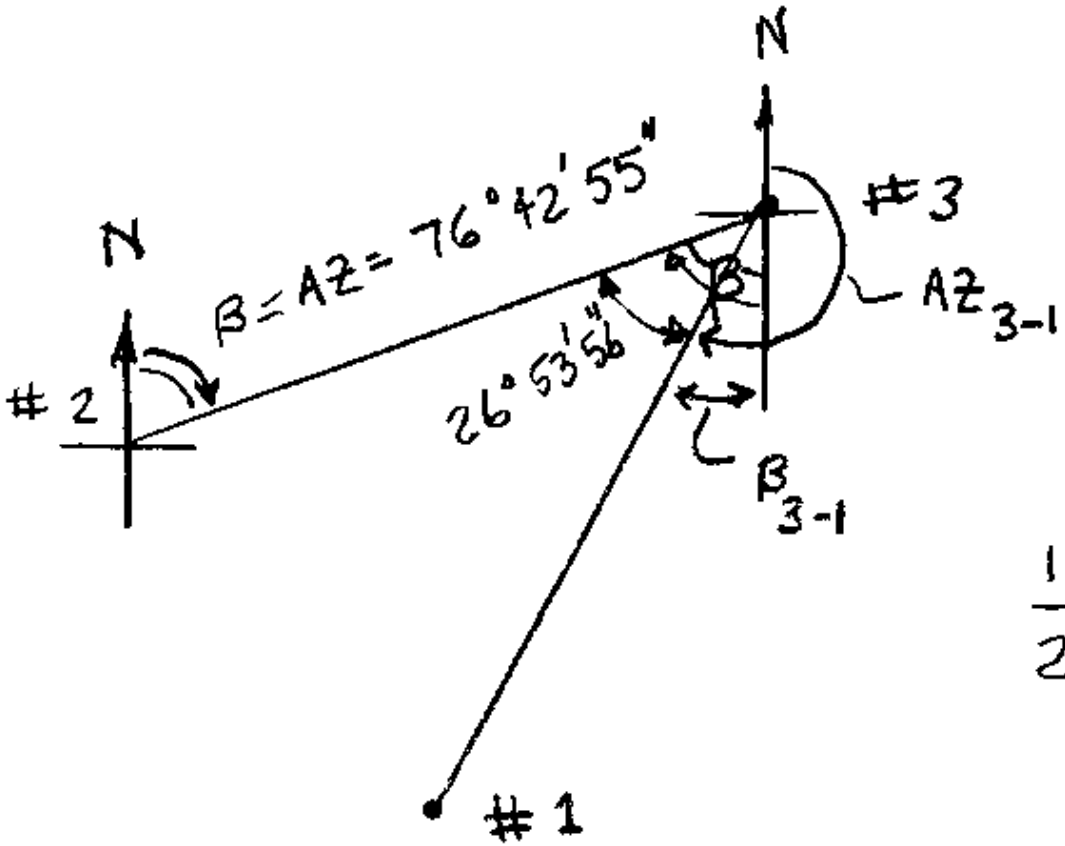

$$\begin{array}{rrr} 75^\circ & 101' & 115'' \\ 26^\circ & 53' & 56'' \\ \hline 49^\circ & 48'' & 59'' = \beta_{3-1} \end{array}$$

$$\begin{array}{r} 49^\circ 48\ 59'' \\ 180^\circ\ 00\ 00 \\ \hline 229^\circ 48' 59'' = AZ_{3-1} \end{array}$$

Calculate azimuth - check 1 -2

$$
\begin{array}{r}
69^\circ 48' 59'' \\
-\,49^\circ 48' 59'' \\
\hline
\beta = 20^\circ 00' 00''
\end{array}
$$
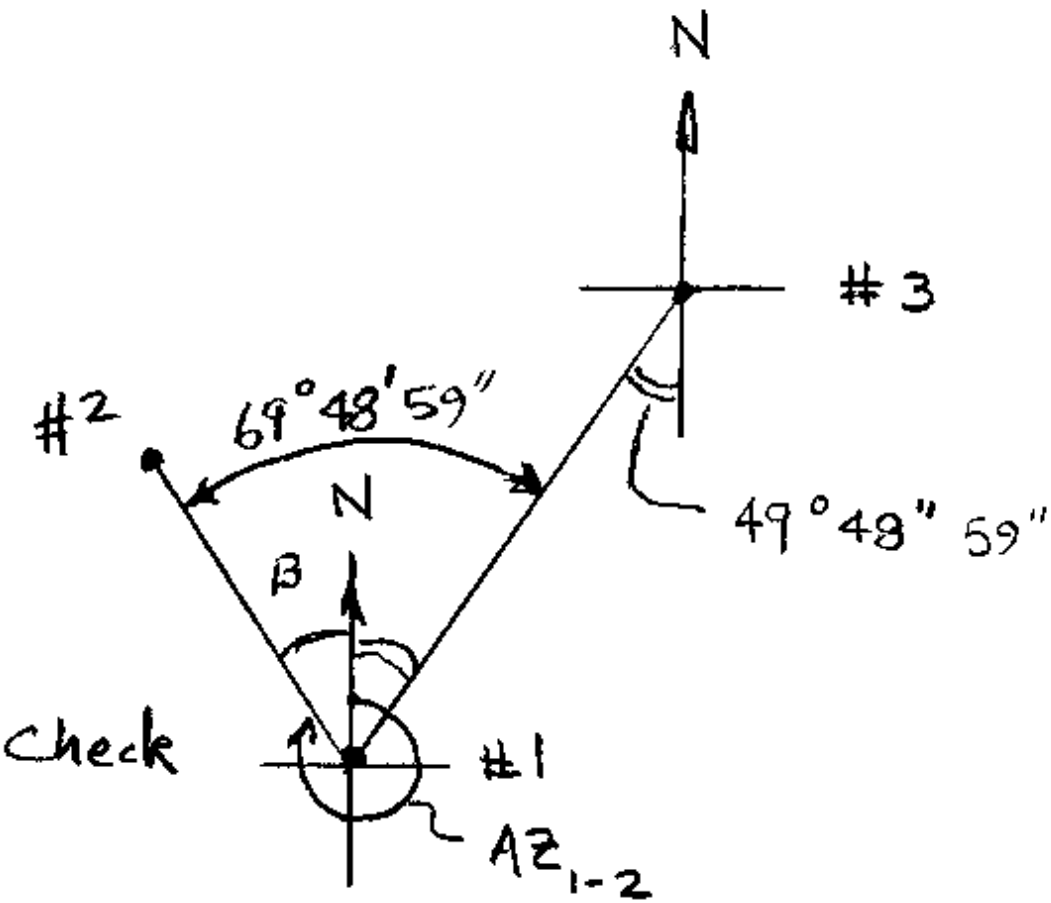
$$
\begin{array}{r}
360^\circ 00' 00'' \\
-\,20^\circ 00' 00'' \\
\hline
Az_{1-2} = 340^\circ 00' 00'' = \text{Check}
\end{array}
$$