جامعة الفرات الاوسط التقنية /المعهد التقني سماوة

قسم / تقنيات المساحة

المحاضرة الحادي عشر

اسم المادة / المساحة-٢

المرحلة الدراسية / الثانية

العام الدراسي / 2022 - 2023

استاذ المادة م.م مروه عبدالهادي حسن

Setting of total station

1. General setting:

- Select Setting from the MAIN MENU.
- Select General from the SETTINGS MENU.
- Press to scroll through the screens of available settings.

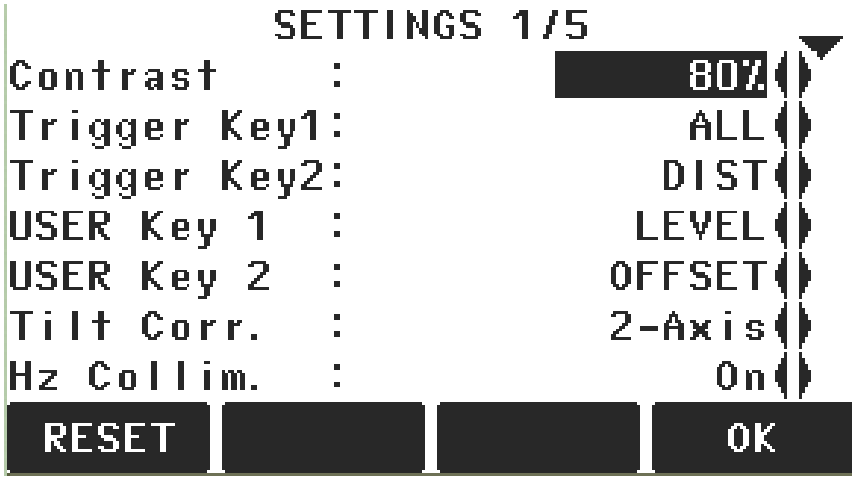

1. General Setting

Field	Description	
Contrast	**0%** to **100%**	Sets the display contrast in 10% steps.
Trigger Key1 / Key2	Trigger Key 1 is the top end of the trigger key. Trigger Key 2 is the the lower end of the trigger key.	
	Off	The trigger key is deactivated.
Field	**Description**	
	ALL	Sets the trigger key with the same function as **ALL**.
	DIST	Sets the trigger key with the same function as **DIST**.
USER Key 1 / Key 2	Configures or with a function from the FNC menu. Refer to "6 Functions".	
Tilt Corr.	**Off**	Tilting compensation deactivated.
	1-axis	Vertical angles refer to the plummet line.
	2-axis	Vertical angles refer to the plummet line and the horizontal directions are corrected by the standing axis tilt. For corrections depending on the **Hz Corr:** setting, refer to the table "Tilt and horizontal corrections".
☞	If the instrument is used on an unstable base, for example a shaking platform or ship, the compensator should be deactivated. This avoids the compensator drifting out of it's measuring range and interrupting the measuring process by indicating an error.	

1. General Setting

Field	Description	
Hz Corr.	**On**	Horizontal corrections are activated. For normal operation the horizontal correction should remain active. Each measured horizontal angle will be corrected, depending on the vertical angle. For corrections depending on the **Tilt Corr:** setting, refer to the table "Tilt and horizontal corrections".
	Off	Horizontal corrections are deactivated.
Beep	The beep is an acoustic signal after each key stroke.	
	Normal	Normal volume.
	Loud	Increased volume.
	Off	Beep is deactivated.
Sector Beep	**On**	Sector Beep sounds at right angles (0°, 90°, 180°, 270° or 0, 100, 200, 300 gon).

1. General Setting

Field	Description	
	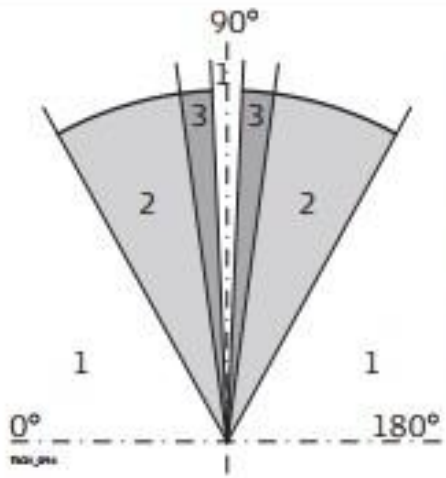	1.No beep. 2.Fast beep; from 95.0 to 99.5 gon and 105.0 to 100.5 gon. 3.Permanent beep; from 99.5 to 99.995 gon and from 100.5 to 100.005 gon.
	Off	Sector Beep is deactivated.
Hz Increment	**Right**	Set horizontal angle to clockwise direction measurement.
	Left	Set horizontal angle to counter-clockwise direction measurement. Counter-clockwise directions are displayed but are saved as clockwise directions.
V-Setting	Sets the vertical angle.	

1. General Setting

Field	Description		
	Zenith	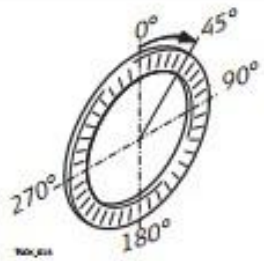	Zenith=0°; Horizon=90°.
	Horiz.	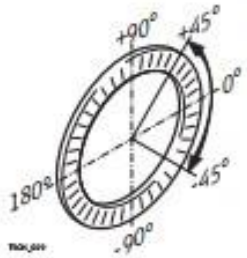	Zenith=90°; Horizon=0°. Vertical angles are positive above the horizon and negative below it.
	Slope %	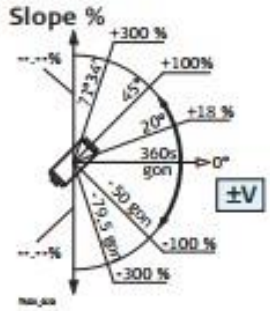	45°=100%; Horizon=0°. Vertical angles are expressed in % with positive above the horizon and negative below it. ☞ The % value increases rapidly. --.--% appears on the display above 300%.

1. General Setting

Field	Description	
Face I Def.	Sets the face I in relation to the position of the vertical drive.	
	V-Left	Sets face I to be when the vertical drive is on the left of the instrument.
	V-Right	Sets face I to be when the vertical drive is on the right of the instrument.
Language	Sets the chosen language. An unlimited number of languages can be uploaded onto the instrument. The current loaded language(s) are shown. A selected language can be deleted by pressing **DelLang**. This function is available on page 2 of the **SETTINGS** screen if more than one language is installed, and the selected language is not the chosen operating language.	
Lang. Choice	If multiple languages are loaded, a screen to choose the language can be shown directly after switching on the instrument.	
	On	The language screen is shown as the startup screen.
	Off	The language screen is not shown as the startup screen.
Angle Unit	Sets the units shown for all angular fields.	

1. General Setting

Field	Description	
	° ' "	Degree sexagesimal. Possible angle values: 0° to 359°59'59''
	dec. deg	Degree decimal. Possible angle values: 0° to 359.999°
	gon	Gon. Possible angle values: 0 gon to 399.999 gon
	mil	Mil. Possible angle values: 0 to 6399.99mil.
☞	The setting of the angle units can be changed at any time. The actual displayed values are converted according to the selected unit.	
Min. Reading	Sets the number of decimal places shown for all angular fields. This is for data display and does not apply to data export or storage.	
	For **Angle Unit**	**° ' ''**: (0° 00' 01" /0° 00' 05"/0° 00' 10").
		Dec.deg: (0.0001 / 0.0005 / 0.001).
		Gon: (0.0001 / 0.0005 / 0.001).
		Mil: (0.01 / 0.05 / 0.1).
Dist. Unit	Sets the units shown for all distance and coordinate related fields.	
	Meter	Meters [m].
	US-ft	US feet [ft].
	INT-ft	International feet [fi].

1. General Setting

Field	Description	
	ft-in/16	US feet-inch-1/16 inch [ft].
Dist.Decimal	Sets the number of decimal places shown for all distance fields. This is for data display and does not apply to data export or storage.	
	3	Displays distance with three decimals.
	4	Displays distance with four decimals.
Temp. Unit	Sets the units shown for all temperature fields.	
	°C	Degree Celsius.
	°F	Degree Fahrenheit.
Press.Unit	Sets the units shown for all pressure fields.	
	hPa	Hecto Pascal.
	mbar	Millibar.
	mmHg	Millimeter mercury.
	inHg	Inch mercury.
Grade Unit	Sets how the slope gradient is calculated.	
	h:v	Horizontal : Vertical, for example 5 : 1.
	v:h	Vertical : Horizontal, for example 1 : 5.
	%	(v/h x 100), for example 20 %.

1. General Setting

Field	Description	
Data Output	Sets the location for data storage.	
	Int.Mem.	All data is recorded in the internal memory.
	Interf.	Data is recorded via the serial interface or the USB device port, depending on the port selected in the **COMMUNICATION PARAMETERS** screen. This **Data Output** setting is only required if an external storage device is connected and measurements are started at the instrument with DIST/REC or ALL. This setting is not required if the instrument is totally controlled by a datalogger.
GSI Format	Sets the GSI output format.	
	GSI 8	81..00+12345678
	GSI 16	81..00+1234567890123456
GSI Mask	Sets the GSI output mask.	
	Mask1	PtID, Hz, V, SD, ppm+mm, hr, hi.
	Mask2	PtID, Hz, V, SD, E, N, H, hr.

1. General Setting

Field	Description	
	Mask3	StationID, E, N, H, hi (Station). StationID, Ori, E, N, H, hi (Station Result). PtID, E, N, H (Control). PtID, Hz, V (Set Azimuth). PtID, Hz, V, SD, ppm+mm, hr, E, N, H (Measurement).
Code record	Sets if the codeblock is saved before or after the measurement. Refer to "7 Coding".	
Code	Sets if the code will be used for one, or many, measurements.	
	Reset after REC	The set code is cleared from the measurement screen after **ALL** or **REC** is selected.
	Permanent	The set code remains in the measurement screen until manually deleted.
Display ill.	**Off** to **100%**	Sets the display illumination in 20% steps.
Reticle ill.	**Off** to **100%**	Sets the reticle illumination in 20% steps.
Displ.Heater	**On**	The display heater is activated.
	Off	The display heater is deactivated.
☞	The display heater is automatically activated when the display illumination is on and the instrument temperature is ≤ 5°C.	
Pre-/Suffix	☞	Only used for the Stakeout application.

1. General Setting

Field	Description	
	Prefix	Adds the character entered for **Identifier** in front of the original point number of the point to be staked.
	Suffix	Adds the character entered for **Identifier** at the end of the original point number of the point to be staked.
	Off	The staked point is stored with the same point number as the point to be staked.
Identifier	☞	Only used for the Stakeout application.
	The identifier can be up to four characters and is added at the start, or end, of a point number of a point to be staked.	
Sort Type	**Time**	Lists are sorted by time of entry.
	PtID	Lists are sorted by Point IDs.
Sort Order	**Descen.**	Lists are ordered in descending order of sort type.
	Ascen.	Lists are ordered in ascending order of sort type.
Double PtID	Sets if multiple points are able to be recorded with the same point ID.	
	Allowed	Allows multiple points with the same point ID.

1. General Setting

Field	Description	
	Not Allowed	Does not allow multiple points with the same point ID.
Auto-Off	**Enable**	The instrument switches off after 20 minutes without any activity , for example no key pressed or vertical and horizontal angle deviation is ≤ ±3".
	Disable	Automatic switch-off is deactivated. ☞ Battery discharges quicker.

Tilt and horizontal corrections

Setting		Correction			
Tilt correction	**Horizontal correction**	**Incline longitudinal**	**Incline transversal**	**Horizontal collimation**	**Tilting axis**
Off	**On**	No	No	Yes	Yes
1-Axis	**On**	Yes	No	Yes	Yes
2-Axis	**On**	Yes	Yes	Yes	Yes
Off	**Off**	No	No	No	No
1-Axis	**Off**	Yes	No	No	No
2-Axis	**Off**	Yes	No	No	No

2. EDM Settings

- The settings on this screen define the active EDM, Electronic Distance Measurement. Different settings for measurements are available with Non-Prism (NP) and Prism (P) EDM modes.

❖Select Settings from the MAIN MENU.

❖Select EDM from the SETTINGS MENU

2. EDM Settings

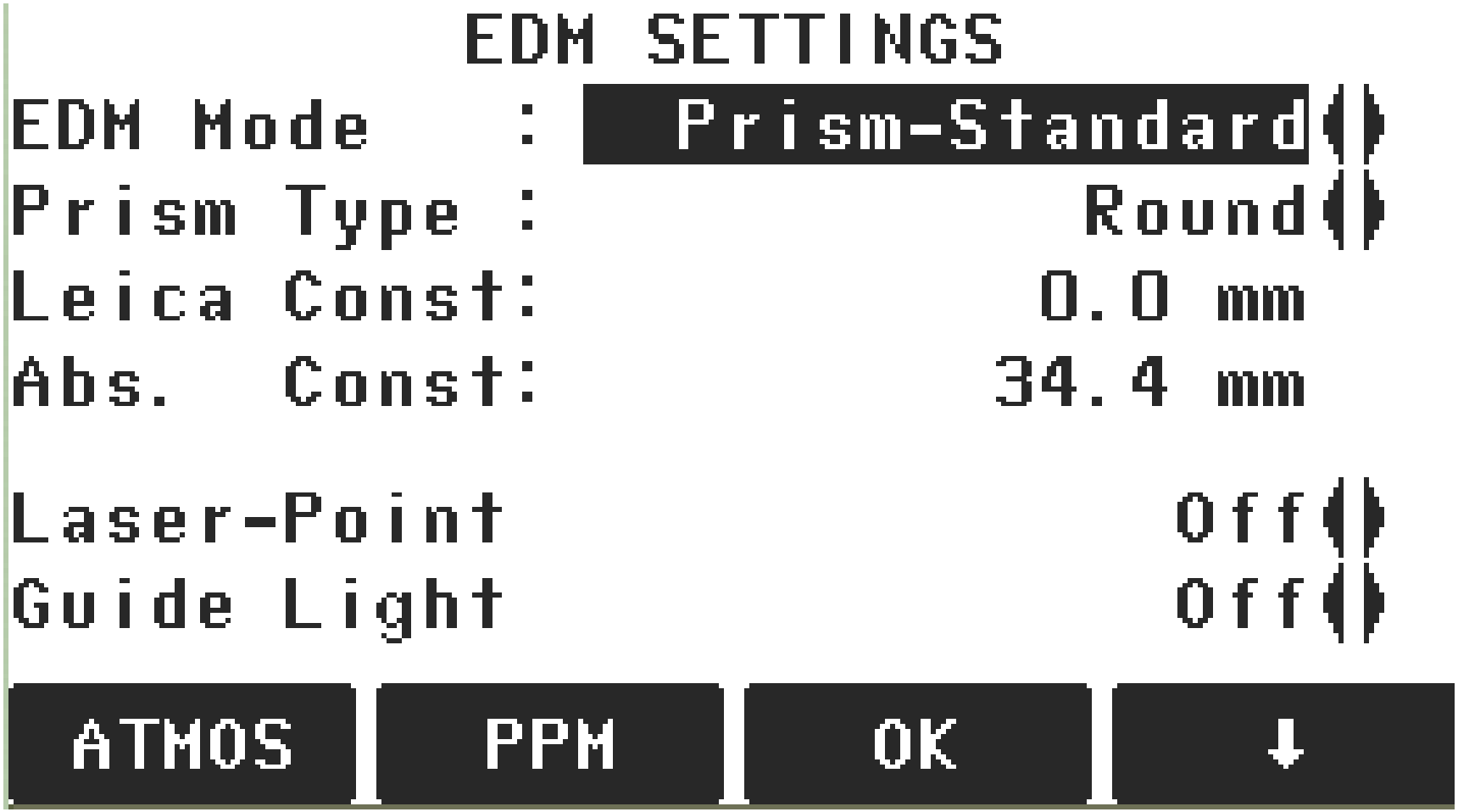

2. EDM Settings

- ATMOS: To enter atmospheric data ppm.
- PPM: To enter an individual ppm value.
- SCALE: To enter projection scale details.
- SIGNAL: To view EDM Signal reflection value.
- FREQ.: To view the EDM frequency.

2. EDM Settings

Field	Description	
EDM mode	**Prism-Standard**	Fine measuring mode for high precision measurements with prisms.

Field	Description	
	Non-Prism-Std.	For distance measurements without prisms.
	Non-Prism-Track.	For continuous distance measurements without prisms.
	Prism (>3.5km)	For long range distance measurements with prisms.
	Prism-Fast	Quick measuring mode with prisms, with higher measuring speed and reduced accuracy.
	Prism-Tracking	For continuous distance measurements with prisms.
	Tape	For distance measurements using Retro reflective targets.
	FlexPoint	Included for **TS06** and **TS09**. Optional for **TS02**. Allows short distances, ~30 m, to be measured without a reflector.
Prism Type	**Round**	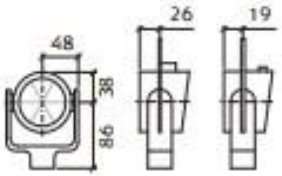 Standard prism GPR121/111 Leica Constant: 0.0 mm

2. EDM Settings

Field	Description		
	Mini	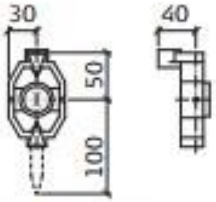	GMP111 Leica Constant: +17.5 mm GMP111-0 Leica Constant: 0.0 mm
	JpMini	Miniprism	Leica Constant: +34.4 mm
	360°	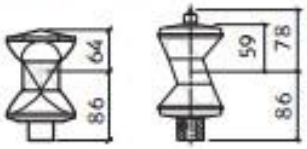	GRZ4/122 Leica Constant: +23.1 mm
	360° Mini	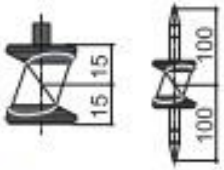	GRZ101 Leica Constant: +30.0 mm
	User1 / User2	The user can define two of their own prisms. Constants can be entered in mm in either **Leica Const:** or **Abs. Const:**. For example: User prism constant = -30.0 mm **Leica Const:** = +4.4 mm (34.4 + -30 = 4.4) **Abs. Const:** = -30.0 mm	

2. EDM Settings

Field	Description		
	Tape		Leica Constant: +34.4 mm
	None	**Without prism**	Leica Constant: +34.4 mm
Leica Const.	This field displays the Leica prism constant for the selected **Prism Type:** Where **Prism Type:** is **User 1** or **User 2** this field becomes editable to set a user defined constant. Input can only be made in mm. Limit value: -999.9 mm to +999.9 mm.		
Abs. Const	This field displays the absolute prism constant for the selected **Prism Type:**. Where **Prism Type:** is **User 1** or **User 2** this field becomes editable to set a user defined constant. Input can only be made in mm. Limit value: -999.9 mm to +999.9 mm.		
Laser-Point	**Off**	Visible laser beam is deactivated.	
	On	Visible laser beam for visualising the target point is activated.	
Guide Light	**Off**	Guide Light is deactivated.	
	On	Guide Light is activated. The person at the prism can be guided by the flashing lights directly to the line of sight. The light points are visible up to a distance of 150 meters. This is useful when staking out points.	

2. EDM Settings

Field	Description
	Working range: 5 m to 150 m (15 ft to 500 ft). Positioning accuracy: 5 cm at 100 m (1.97" at 330 ft). 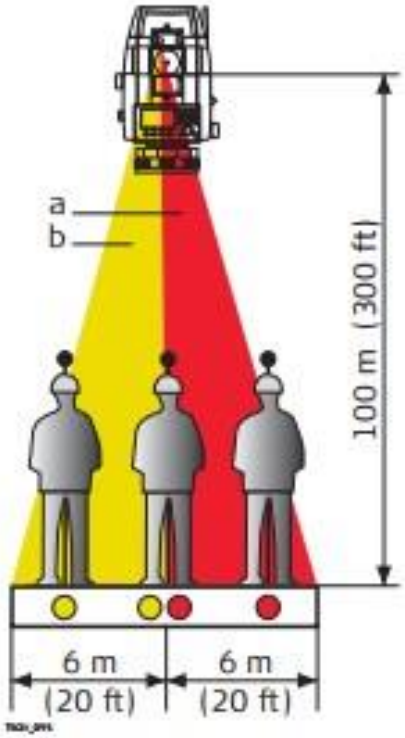 a) Flashing red diode b) Flashing yellow diode

2. EDM Settings

- ATMOSPHERIC DATA (PPM): This screen enables the entry of atmospheric parameters. Distance measurement is influenced directly by the atmospheric conditions of the air in which the measurements are taken. In order to take these influences into consideration distance measurements are corrected using atmospheric correction parameters.
- The refraction correction is considered in the calculation of the height differences and the horizontal distance. Refer to "14.7 Scale Correction" for the application of the values entered in this screen.

2. EDM Settings

- PROJECTION SCALE: This screen enables entry of the scale of projection. Coordinates are corrected with the PPM parameter. Refer to "14.7 Scale Correction" for the application of the values entered in this screen.
- Enter individual PPM: This screen enables the entry of individual scaling factors. Coordinates and distance measurements are corrected with the PPM parameter. Refer to "14.7 Scale Correction" for the application of the values entered in this screen.
- EDM SIGNAL REFLECTION: This screen tests the EDM signal strength (reflection strength) in steps of 1%. Enables optimal aiming at distant, barely visible, targets. A percentage bar and a beeping sound, indicate the reflection strength. The faster the beep the stronger the reflection.

3. Communication Parameters

- For data transfer the communication parameters of the instrument must be set.

➢ Select Settings from the MAIN MENU.

➢ Select Comm from the SETTINGS MENU.

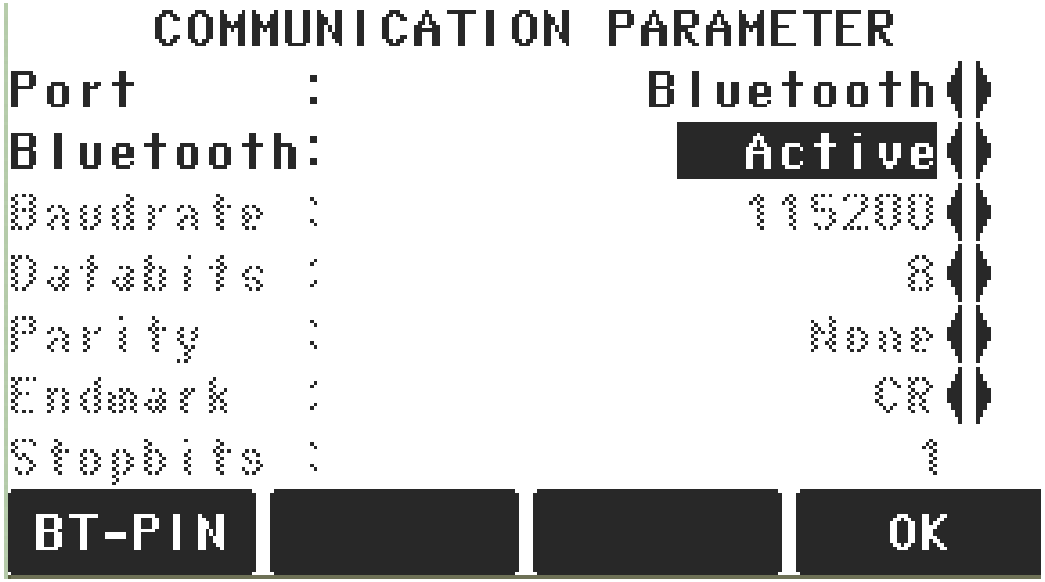

3. Communication Parameters

- BT-PIN: To set a PIN code for the Bluetooth connection.
- This softkey is only available for instruments with a Communication side cover. The default Bluetooth PIN is ’0000’.
- RESET: To reset the fields to the default Leica standard settings.

3. Communication Parameters

Field	Description	
Port	Instrument port. If a Communication side cover is fitted the options are selectable. If there is no Communication side cover the value is set to **RS232** and is uneditable.	
	RS232	Communication is via the serial interface.
	USB	Communication is via the USB host port.
	Bluetooth	Communication is via Bluetooth.
	Automatically	Communication is set to auto detect.
Bluetooth	**Active**	Bluetooth sensor is activated.
	Inactive	Bluetooth sensor is deactivated.

3. Communication Parameters

- The following fields are active only when Port: RS232 is set

Field	Description	
Baudrate	Speed of data transfer from receiver to device in bits per second.	
	1200, 2400, 4800, 9600, 14400, 19200, 38400, 57600, 115200	
Databits	Number of bits in a block of digital data.	
	7	Data transfer is realised with 7 databits.
	8	Data transfer is realised with 8 databits.
Parity	**Even**	Even parity. Available if data bit is set to 7.
	Odd	Odd parity. Available if data bit is set to 7.
	None	No parity. Available if data bit is set to 8.
Endmark	**CR/LF**	The terminator is a carriage return followed by a line feed.
	CR	The terminator is a carriage return.
Stopbits	**1**	Number of bits at the end of a block of digital data.

3. Communication Parameters

- When RESET is selected the communication parameters are reset to the default Leica standard settings:
- 115200 Baud, 8 Databit, No Parity, CR/LF Endmark, 1 Stopbit.

3. Communication Parameters

- Interface plug connections

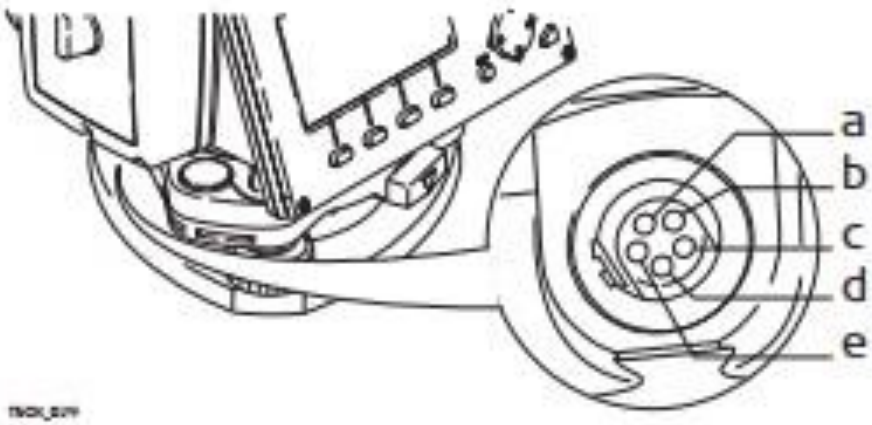

a) External battery
b) Not connected / inactive
c) GND
d) Data reception (TH_RXD)
e) Data transfer (TH_TXD)