جامعة الفرات الاوسط التقنية /المعهد التقني سماوة

قسم / تقنيات المساحة

المحاضرة الاولى

اسم المادة / المساحة-٢

المرحلة الدراسية / الثانية

العام الدراسي / 2022 - 2023

استاذ المادة م.م مروه عبدالهادي حسن

TRAVERSE FUNDAMENTALS

- Objective
- At the end of the lecture, the student should be
- able to:
- Define traverse and traverse stations
- Enumerate purposes of traverse
- Enumerate and differentiate general classes and
- types of traverse
- Identify formulas for traverse adjustments and
- apply them correctly

Traverse

- consists of a series of straight lines connecting
- successive points whose lengths and directions
- have been determined from field observations
- ? points defining the ends of traverse lines are
- called traverse stations or traverse points

Traverse

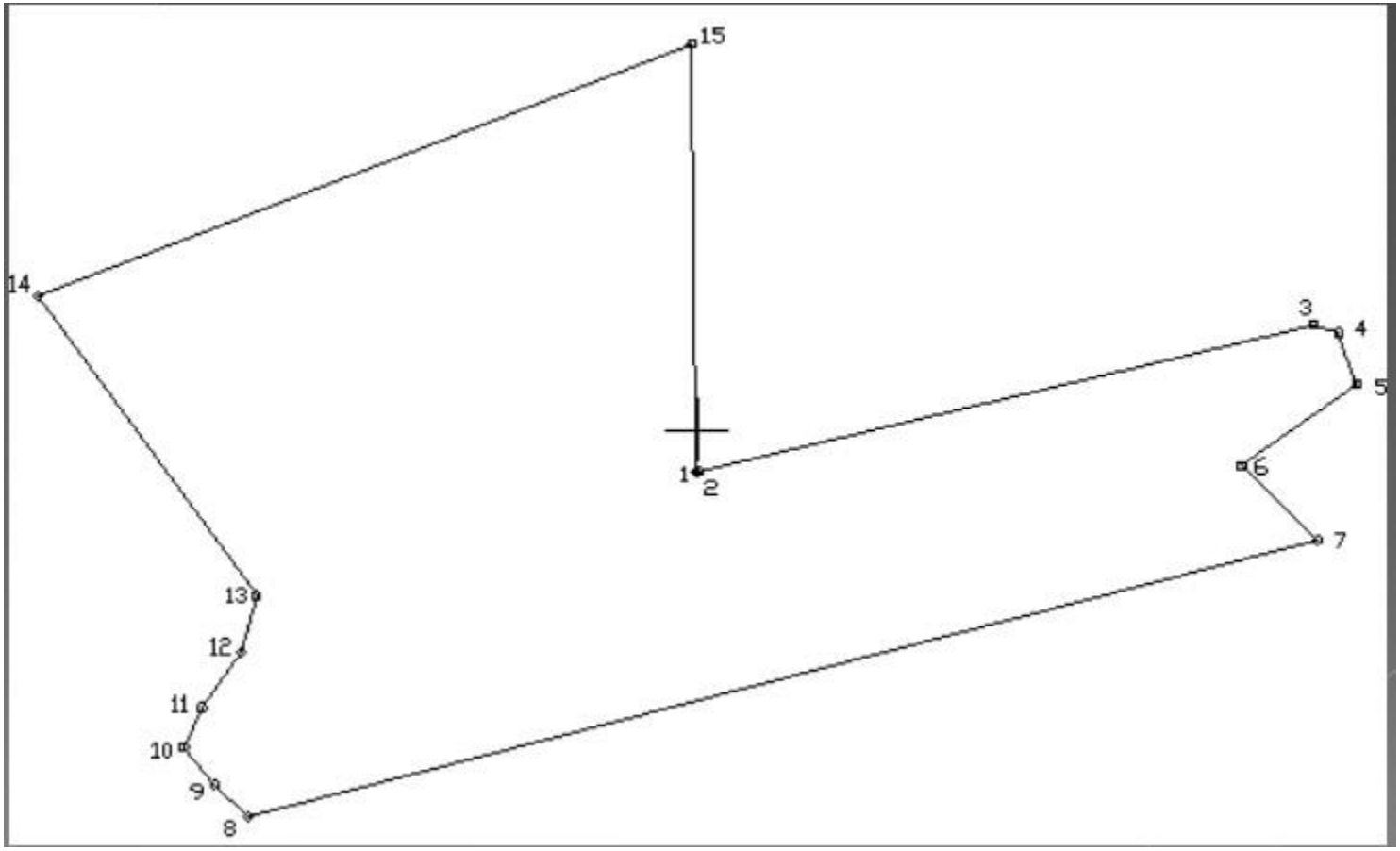

Purpose of Traverse

- Property surveys to locate or establish boundaries.
- 2. Supplementary horizontal control for topographic
- mapping surveys.
- 3. Location and construction layout surveys for
- highways, railways and other private and public
- works.
- 4. Ground control surveys for photogrammetric
- surveys.

GENERAL CLASSES OF TRAVERSE

- Open Traverse
- - originates at a point of known position and
- terminates at a point of unknown position

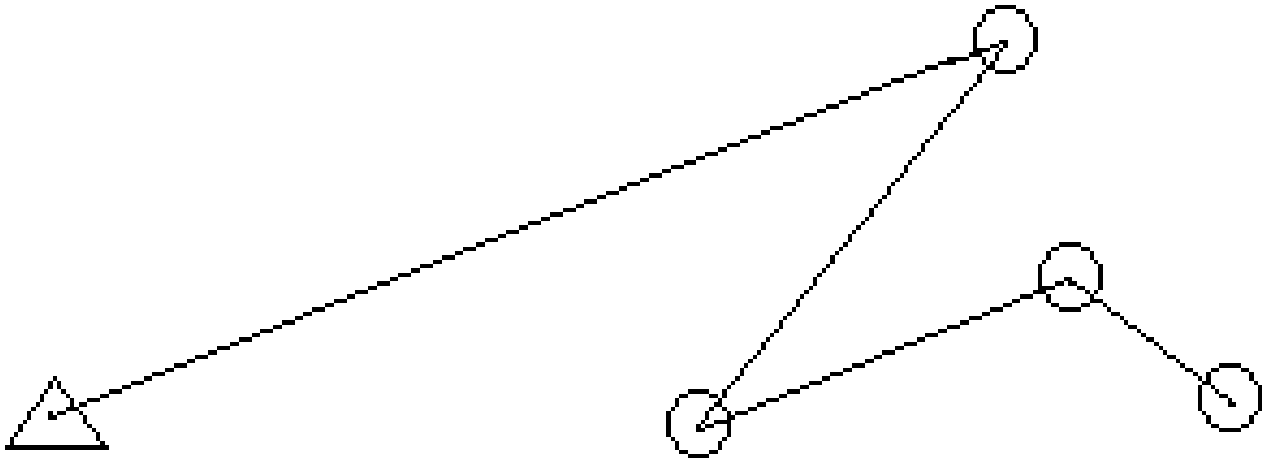

GENERAL CLASSES OF TRAVERSE

- Closed Traverse
- - originates at a point of known position and
- terminates at a point of known position
- Closed Loop Traverse
- – a closed traverse that originates and
- terminates at a single point

GENERAL CLASSES OF TRAVERSE

- Closed Traverse

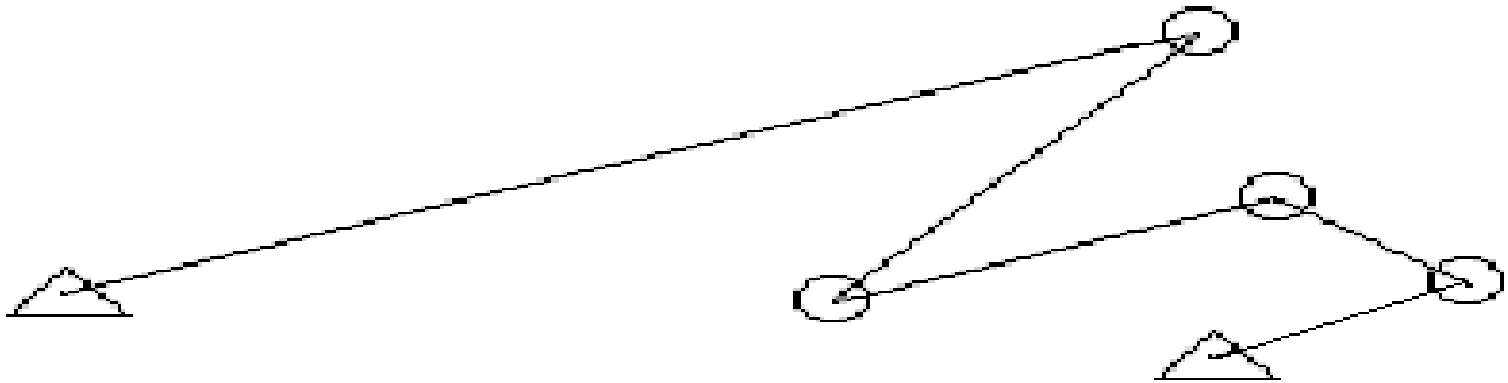

- Closed Loop Traverse

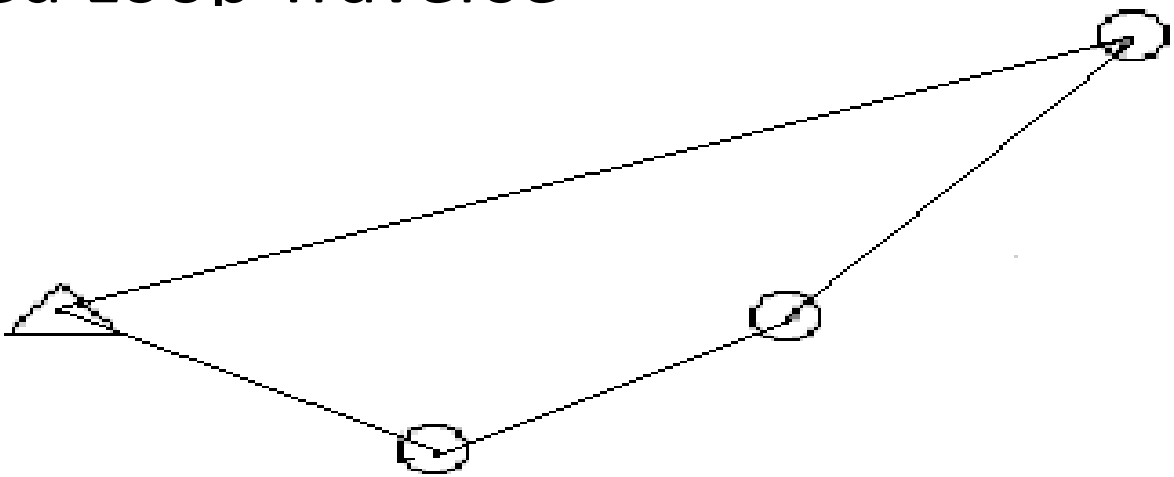

TYPES OF TRAVERSE

- Deflection-angle traverse
- 2. Interior-angle traverse
- 3. Traverse by angles to the right
- 4. Azimuth traverse
- 5. Compass traverse