جامعة الفرات الاوسط التقنية /المعهد التقني سماوة

قسم / تقنيات المساحة

المحاضرة التاسعة

اسم المادة / المساحة-٢

المرحلة الدراسية / الثانية

العام الدراسي / 2022 - 2023

استاذ المادة م.م مروه عبدالهادي حسن

Total station

- Definition: Total station or TST (total station theodolite) is an electronic/optical instrument used in modern surveying and building construction. The total station is an electronic theodolite (transit) integrated with an electronic distance meter (EDM) to read slope distances from the instrument to a particular point.

Parts of the instrument

- A Total station consists of:

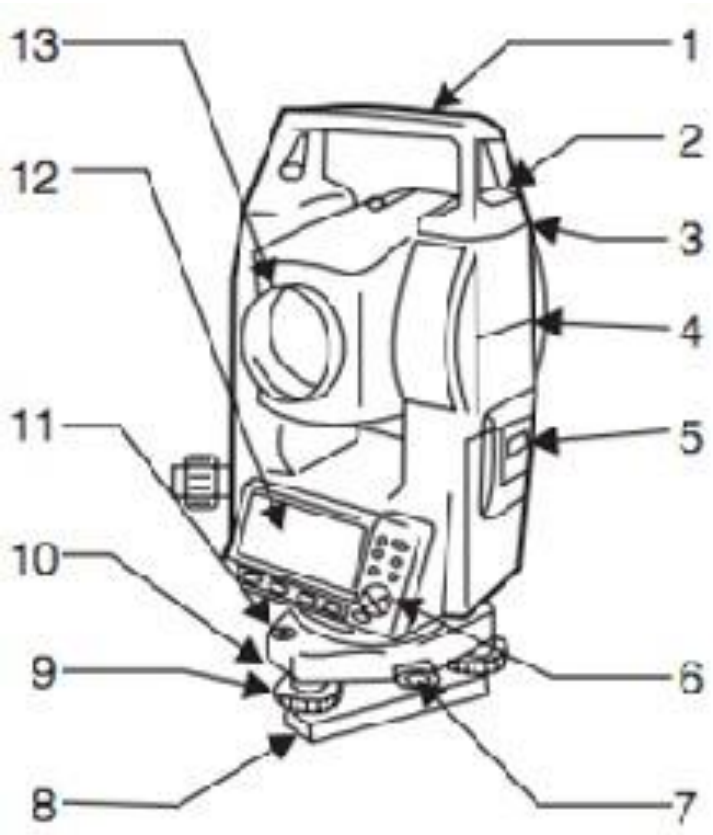

1. Handle
2. Handle securing screw
3. Data input/output terminal (Remove handle to view)
4. Instrument height mark
5. Battery cover
6. Operation panel
7. Tribrach clamp (SET300*S*/500*S*/600S: Shifting clamp)
8. Base plate
9. Levelling foot screw
10. Circular level adjusting screws
11. Circular level
12. Display
13. Objective lens
14. Tubular compass slot
15. Optical plummet focussing ring

Parts of the instrument

- A Total station consists of:

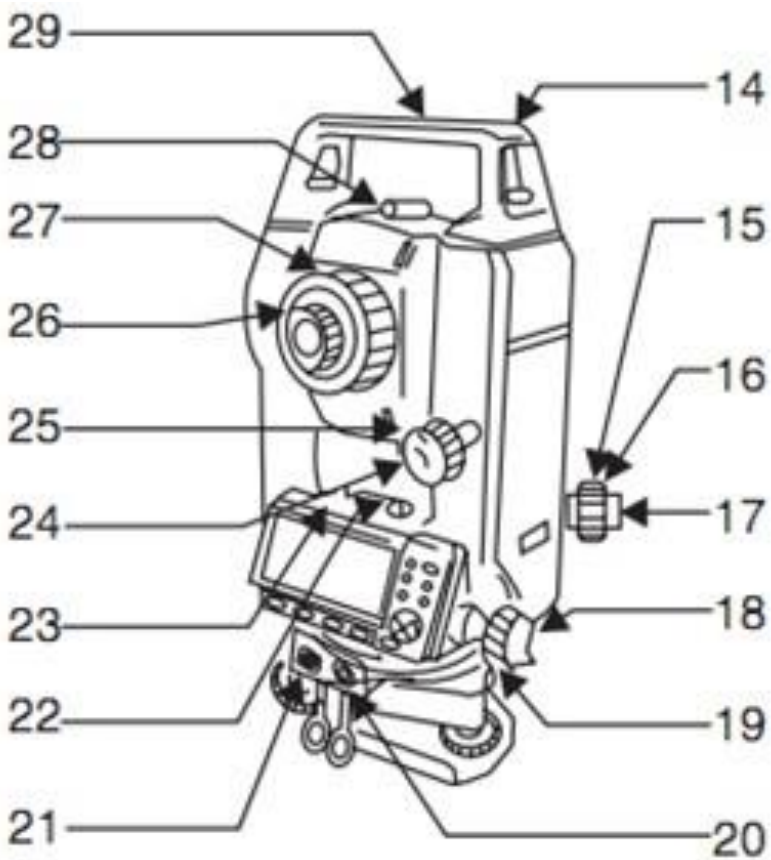

16. Optical plummet reticle cover
17. Optical plummet eyepiece
18. Horizontal clamp
19. Horizontal fine motion screw
20. Data input/output connector (Besides the operation panel on SET600/600*S*)
21. External power source connector (Not included on SET600/600*S*)
22. Plate level
23. Plate level adjusting screw
24. Vertical clamp
25. Vertical fine motion screw
26. Telescope eyepiece
27. Telescope focussing ring
28. Peep sight
29. Instrument center mark

The principle of operation

- The primary function of surveying instruments is to measure distances, angles and heights. The total station employs the electro-optical distance metering method, emitting laser beams to a target and detecting light reflected off it. It takes measurements by calculating the deviation of the wavelength of the reflected light. Total stations can measure distances to an accuracy of 2-3 millimeters per kilometer, and angles to 1-second (1°/3,600°) accuracy. One second in an angle is equivalent to the width of pencil lead at 100 meters.

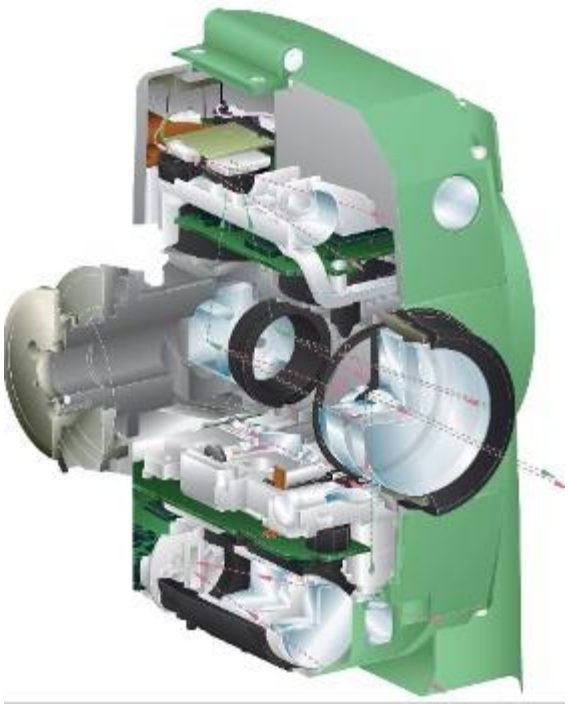

The principle of operation

- Surveying instruments measure angles using a built-in encoder. The encoder is a device that measures the rotation angle and number of rotations of a built-in motor as digital data. To measure the angle to a target point, the system creates a radial pattern comprising 16,200 spokes at equal distance on a glass disc and irradiates light with an LED diode. The encoder detects the rotation angle of the motor by reading changes in the intensity of the projected light. This way, the angle to the target is detected with a resolution down to a one-second angle.

Figure 5: Graduated Glass Circle

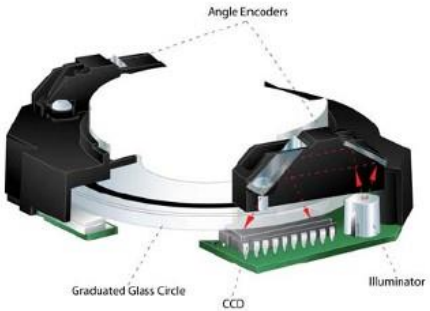

Figure 6: The principle of angle measurement

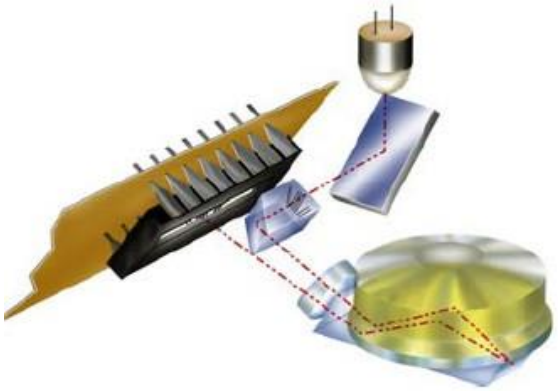

Figure 7: Tilt sensor

The principle of operation

- There are two methods of measuring distance: the “prism” method, which uses a reflective prism at the target measurement point, and the “non-prism,” or “reflector less,” method that does not use a reflective prism.8 With the “prism” method, a laser is beamed at a reflective prism (also called a mirror) placed at the measurement point, and the distance is measured by the time it takes for light to be reflected from the prism Though this method is more accurate than the “reflector less” method, it requires the placing of a reflective prism at the measurement point, making it difficult to measure distances to high locations, diagon surfaces, or inaccessible locations.

The principle of operation

- With the reflector less method, it is possible to survey areas
- from a distant location. Even areas of possible danger such as
- disaster areas (e.g., landslides) can safely and efficiently be
- surveyed with this method, which has the additional advantage
- of requiring less labor and time (there is no need for a second
- team to handle the prism at the target point).
- When surveying roads, for example, traffic restrictions need to
- be put into place if reflective prisms are used. This is not the
- case with the reflector less method. The decision to use the
- prism or reflector less method is made according to conditions
- at the survey site.

Levelling the Total Station

- Leveling the Total Station must be accomplished to sufficient accuracy otherwise the instrument will not report results
- Leveling the instrument – make sure you can see all targets from the instrument station before going through the process

Tripod Setup

- Tripod legs should be equally spaced equally spaced
- Tripod head should be approximately level
- Head should be directly over survey point

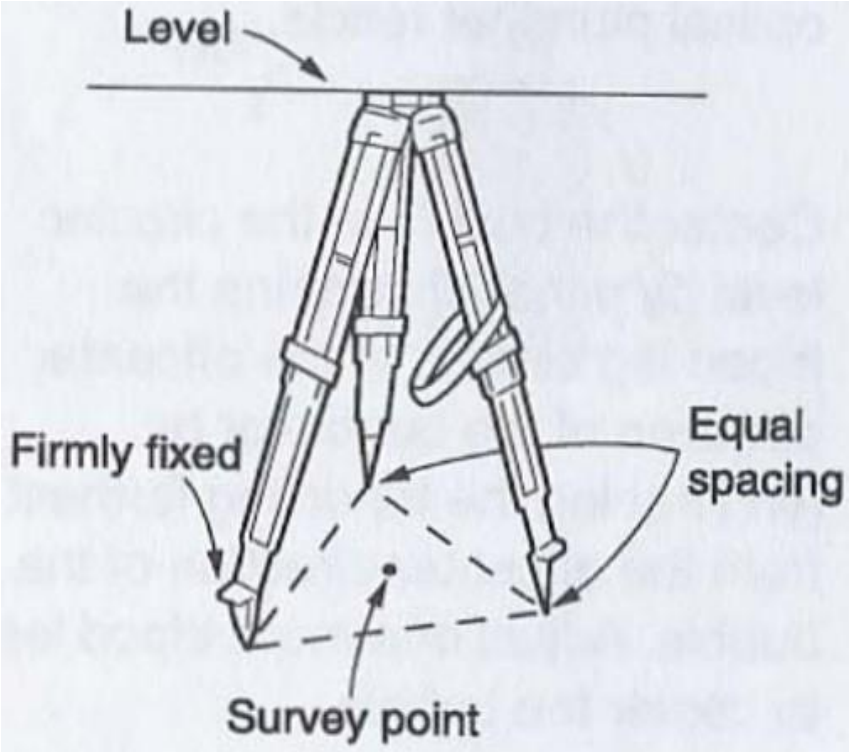

Mount Instrument on Tripod

- Place Instrument on Tripod
- Secure with centering screw while bracing the instrument with the other hand
- Insert battery in instrument before leveling

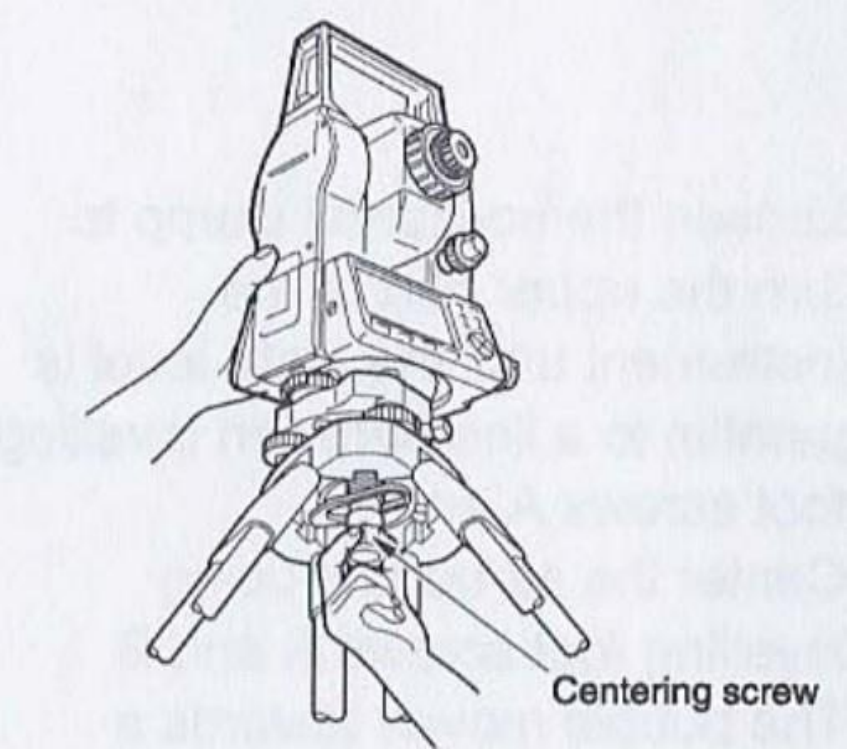

Leveling the instrument

- Focus the optical plummet on the survey point
- Adjust the leveling foot screws to center the survey point in the optical plummet reticle
- Center the bubble in the circular level by adjusting the tripod legs
- Loosen the horizontal clamp and turn instrument until plate level is parallel to 2 of the leveling foot screws

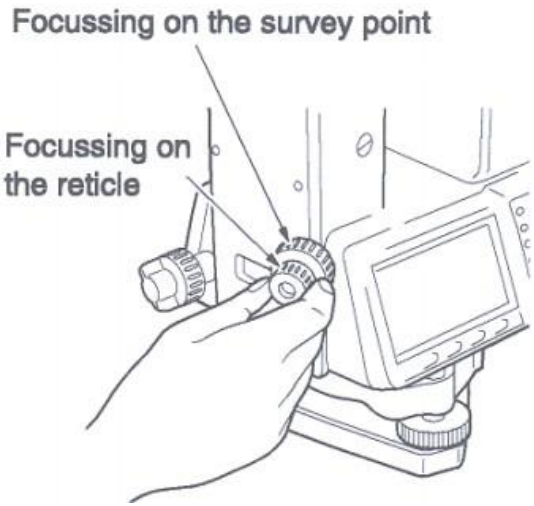

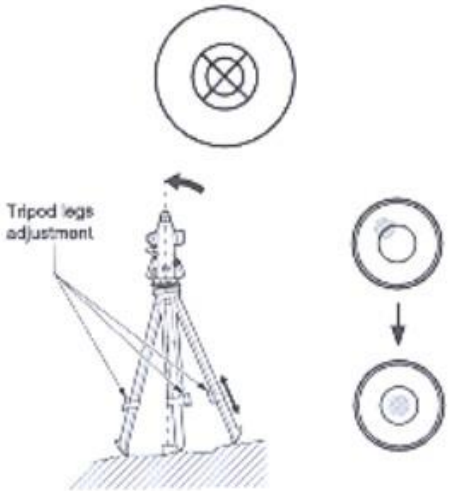

Leveling the instrument

- Center the bubble using the leveling screws the bubble moves toward the screw that is turned clockwise
- Rotate the instrument 90 degrees and level using 3rd leveling screw
- Observe the survey point in the optical plummet and center the point by loosening the centering screw and sliding the entire instrument
- After re-tightening the center in screw check to make sure the plate level bubble is level in several directions

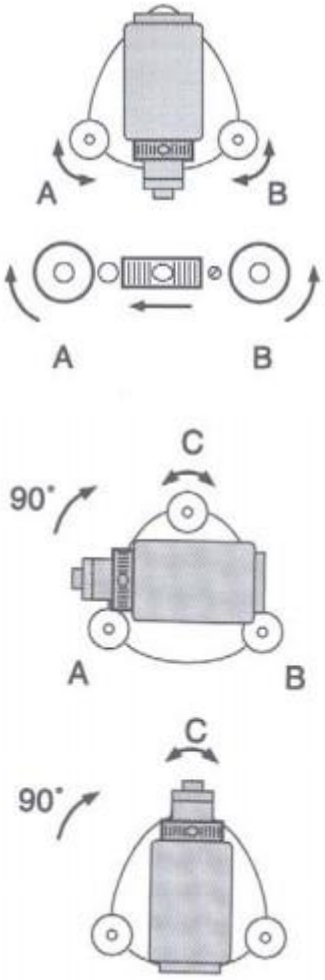

Functions of Total station

- 1.It simultaneously measures angles & distances and Record
- 2. Correcting the measured distance with:
  - ❖ Prism constant
  - ❖ Atmospheric Pr.
  - ❖ Temperature
  - ❖ Curvature of earth
  - ❖ Refraction correction
- 3. Computing the point elevation
- 4. Computing the coordinates of every point
- 5. Remote elevation measurement
- 6. Remote distance measurement
- 7. Area calculations
- 8. Data Transferring facility from instrument to S/W and S/W to instrument
- 9. Format of conversion of units