جامعة الفرات الاوسط التقنية /المعهد التقني سماوة

قسم / تقنيات المساحة

المحاضرة العاشرة

اسم المادة / المساحة-٢

المرحلة الدراسية / الثانية

العام الدراسي / 2022 - 2023

استاذ المادة م.م مروه عبدالهادي حسن

Advantages And Disadvantages Of Total Station

- Advantages Of Total Station:
- 1. Quick setup of the instrument on the tripod by utilizing the laser plummet.
- 2. Programmed with on-board area computation for computing the area of a field.
- 3. It supports local languages.
- 4. It shows the graphical view of land and plots.
- 5. No recording and writing errors.
- 6.It gives more accurate measurements than other conventional surveying instruments.

Advantages Of Total Station: cont.

- 7. Data can be saved and transferred to a PC.
- 8. It has an integrated database.
- 9. Computerization of old maps.
- 10. All in one and multitasking instrument, from surveying to GIS creation by using the appropriate software.
- 11. Faster work, saves time, quick finishing off the job.

Disadvantages Of Total Station:

- 1. The instrument is costlier than other conventional surveying instruments.
- 2. It might be troublesome for the surveyor to investigate and check the work when surveying.
- 3. Working with the total station is not so easy, as more skilled surveyors are required to conduct a total station survey.
- 4. To check the survey work thoroughly it would be necessary to come back to the office and prepare the drawings by using the right software.

Components of a Total Station

1. EDM
2. Electronic theodolite
3. On-Board Micro-processor
4. Data Collector (built in or separate unit)
5. Data Storage (internal or memory card)
6. Prisms
7. Keyboard and display
8. Battery

Keyboard and display

- A total station is activated through its control panel, which consists of a keyboard and multiple line LCD. Several instruments have two control panels, one on each face, which makes them easier to use.
- In addition to controlling the total station, the keyboard is often used to code data generated by the instrument – this code will be used to identify the object being measured.
- On some total stations it is possible to detach the keyboard and interchange them with other total stations and with GPS receivers. This is called integrated surveying

Keyboard and display cont....

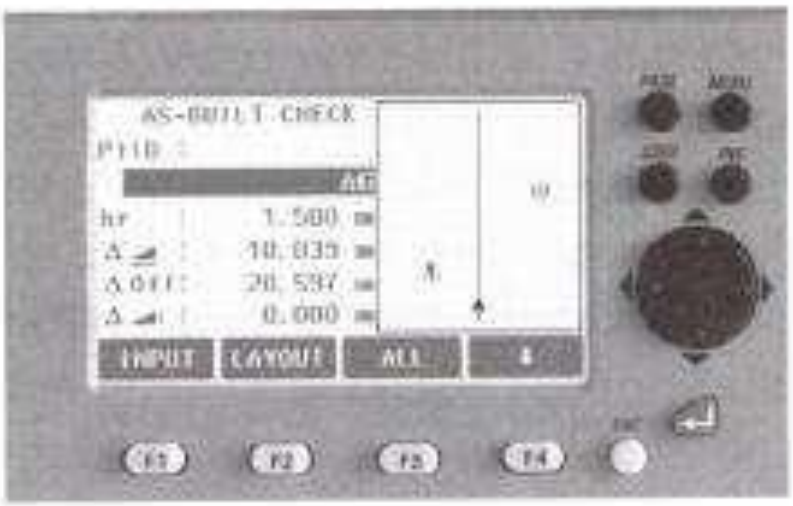

(a)

(b)

Key Features of Total Stations

- The theodolite is offering a complete product family. It is easy for a user to switch between models without learning a new operation.
- 1. Absolute circle reading
- 2. Excellent hardware features, such as laser plummet, endless drives on both
- sides for Hz and V, brilliant optics with 30x magnification.
- 3. Dual-Axis compensation for reliable Hz and V reading.
- 4. New and intuitive software.
- 5. Unique leveling guidance for fast and convenient setup.

Key Features of Total Stations cont.

- 6. High resolution LCD display.
- 7. Audible notice for 90° turns and layout.
- 8. Electronic laser distance measurement.
- Free set-up possible straight from blueprint.
- 10. Graphic sketches.
- 11. Hassle-free EDM measurement with red laser on any target or on the flatprism.

Key Features of Total Stations cont.

- Enter the data at the office and simply call it up at the site.
- 13. Upload and transfer data via on board data connection.
- 14. Data editing and exchange in Total Stations.
- 15. Connectivity to 3rd party devices.

NOMENCLATURE AND FUNCTIONS OF TOTAL STATION

- 1. Nomenclature

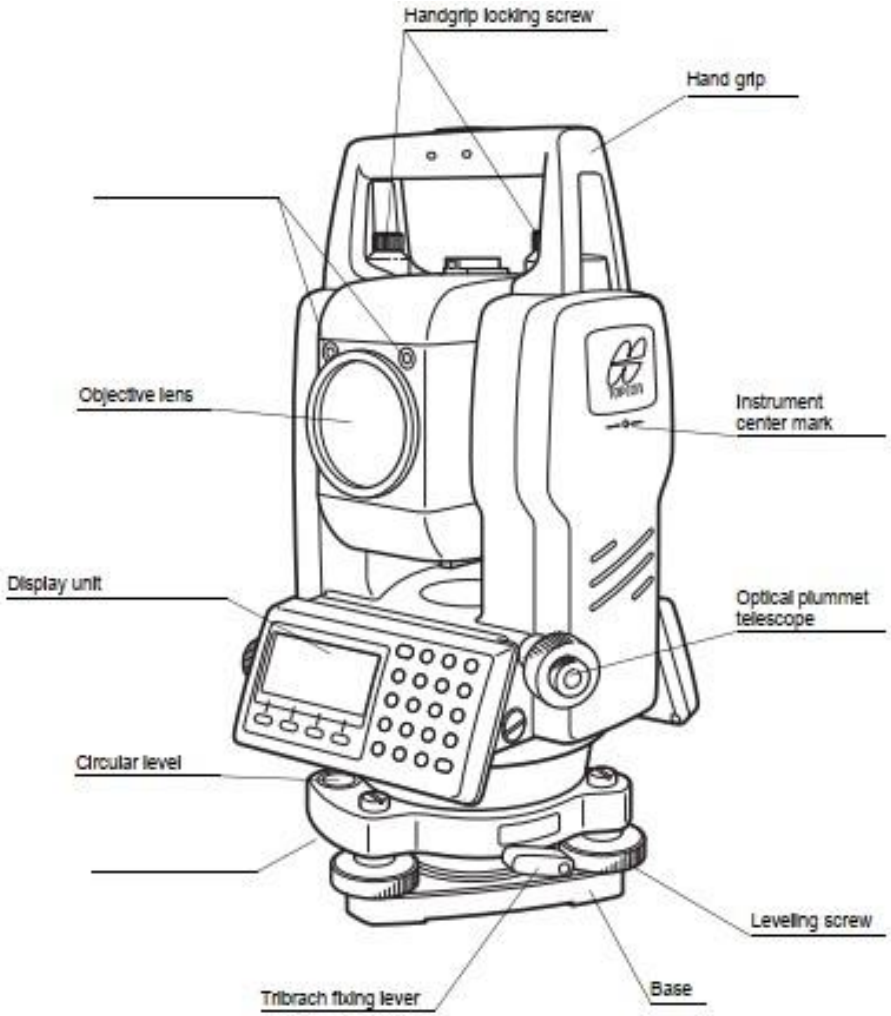

NOMENCLATURE AND FUNCTIONS OF TOTAL STATION

- 1. Nomenclature

NOMENCLATURE AND FUNCTIONS OF TOTAL STATION

- 2. Display: The display uses a dot matrix LCD. In general, the upper three lines display measured data, and the bottom line displays the soft key function which changes with the measuring mode.

- Example

```
V :   90°10'20"
HR: 120°30'40"

OSET HOLD HSET P1↓
```

Angle measurement mode

V-angle : 90°10'20"
H-angle : 120°30'40"

```
HR:   120°30'40"
HD*    65.432 m
VD:    12.345 m
MEAS MODE S/A P1↓
```

Distance measurement mode

Horizontal-angle : 120°30'40"
Horizontal distance : 65.432m
Relative elevation : 12.345m

NOMENCLATURE AND FUNCTIONS OF TOTAL STATION

- Display marks

Display	Contents	Display	Content
V	V-angle	⁎	EDM working
HR	H-angle right	m	Meter unit
HL	H-angle left		
HD	Horizontal distance		
VD	Relative elevation		
SD	Slope distance		
N	N coordinate		
E	E coordinate		
Z	Z coordinate		

NOMENCLATURE AND FUNCTIONS OF TOTAL STATION

- 3. Operating Keys

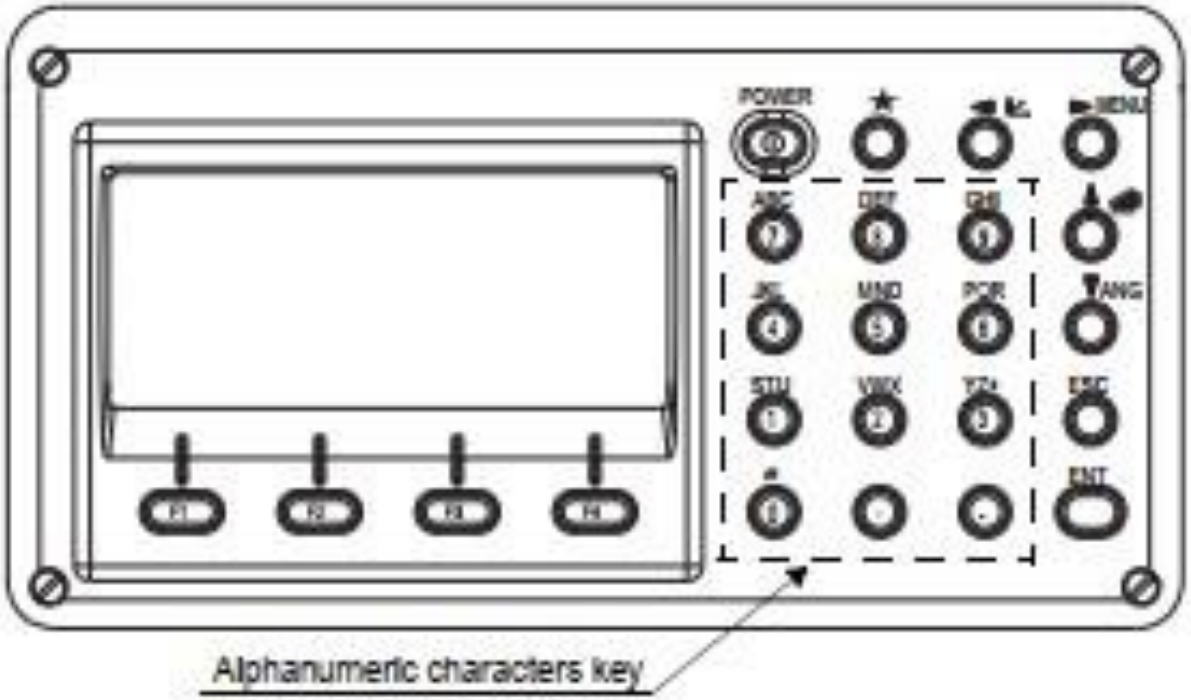

NOMENCLATURE AND FUNCTIONS OF TOTAL STATION

Keys	Name of Key	Function
	Coordinate meas.key	Coordinate measurement mode
	Distance meas.key	Distance measurement mode.
ANG	Angle meas.key	Angle measurement mode
POWER	Power source key	ON/OFF of power source
MENU	Menu key	Switches menu mode and normal mode. To set application measurements and adjust in the menu mode.
ESC	Escape key	• Returning to the measurement mode or previous layer mode from the
ENT	Enter key	Press at the end of inputting values.
F1–F4	Soft key (Function key)	Responds to the message displayed.

NOMENCLATURE AND FUNCTIONS OF TOTAL STATION

- 4. Function Key (Soft Key):The Soft Key message is displayed at the bottom line of display. The functions are according to the displayed message and vary among the different modes.

NOMENCLATURE AND FUNCTIONS OF TOTAL STATION

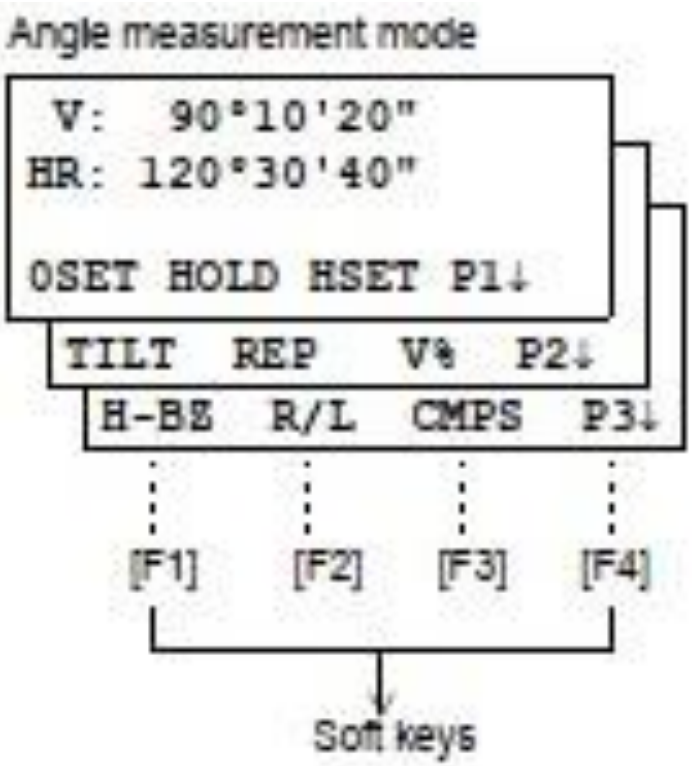

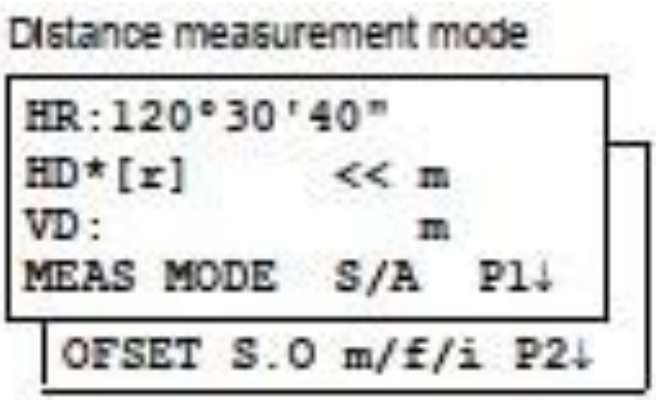

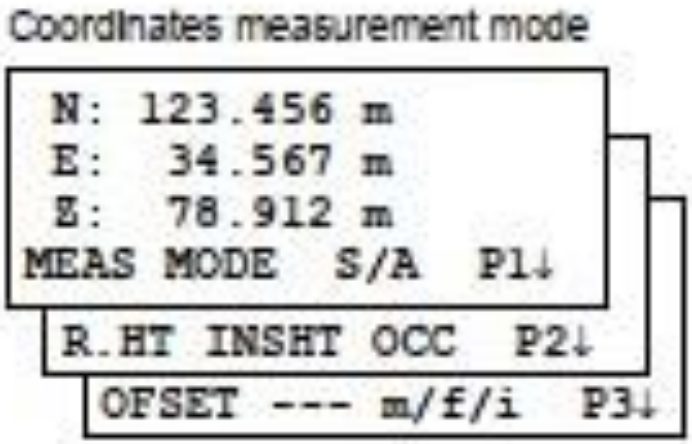

NOMENCLATURE AND FUNCTIONS OF TOTAL STATION

Angle measurement

Page	Soft key	Display mark	Function
1	F1	0SET	Angle of Horizontal is set to 0°00'00"
	F2	HOLD	Hold the horizontal angle
	F3	HSET	Sets a required horizontal angle by entering numerals.
	F4	P1↓	The function of soft keys is shown on next page (P2).
2	F1	TILT	Setting Tilt Correction If ON, the display shows tilt correction value.
	F2	REP	Repetition angle measurement mode
	F3	V%	Vertical angle percent grade(%) mode

NOMENCLATURE AND FUNCTIONS OF TOTAL STATION

Distance measurement mode

1	F1	MEAS	Start measuring
	F2	MODE	Sets a measuring mode, Fine/Coarse/Tracking
	F3	S/A	Select set audio mode
	F4	P1↓	The function of soft keys is shown on next page (P2).
2	F1	OFSET	Select Off-set measurement mode
	F2	S.O	Select stake out measurement mode
	F3	m/f/i	Switches meter, feet or feet and inch unit.
	F4	P2↓	The function of soft keys is shown on next page (P1).

NOMENCLATURE AND FUNCTIONS OF TOTAL STATION

Coordinate measurement mode

1	F1	MEAS	Start measuring
	F2	MODE	Sets a measuring mode, Fine/Coarse/Tracking
	F3	S/A	Select set audio mode
	F4	P1↓	The function of soft keys is shown on next page (P2).
2	F1	R.HT	Sets a prism height by input values.
	F2	INSHT	Sets an instrument height by input values.
	F3	OCC	Sets an instrument coordinate point by input values.
	F4	P2↓	The function of soft keys is shown on next page (P3).
3	F1	OFSET	Select Off-set measurement mode
	F3	m/f/i	Switches meter, feet or feet and inch unit.
	F4	P3↓	The function of soft keys is shown on next page (P1).