جامعة الفرات الاوسط التقنية /المعهد التقني سماوة

قسم / البناء والانشاءات .....

المحاضرة الخامسة

اسم المادة / الحاسبات .

المرحلة الدراسية / الثانية

العام الدراسي / 2022 - 2023

استاذ المادة....نبراس سعد حسون...

bar view

- We will note that it contains a set of special icons 2D and 3D when you click on one of the commands the graphic will be converted to a triangular and note the appearance of the axis Z

Orbit bar motion bar we get it menu view

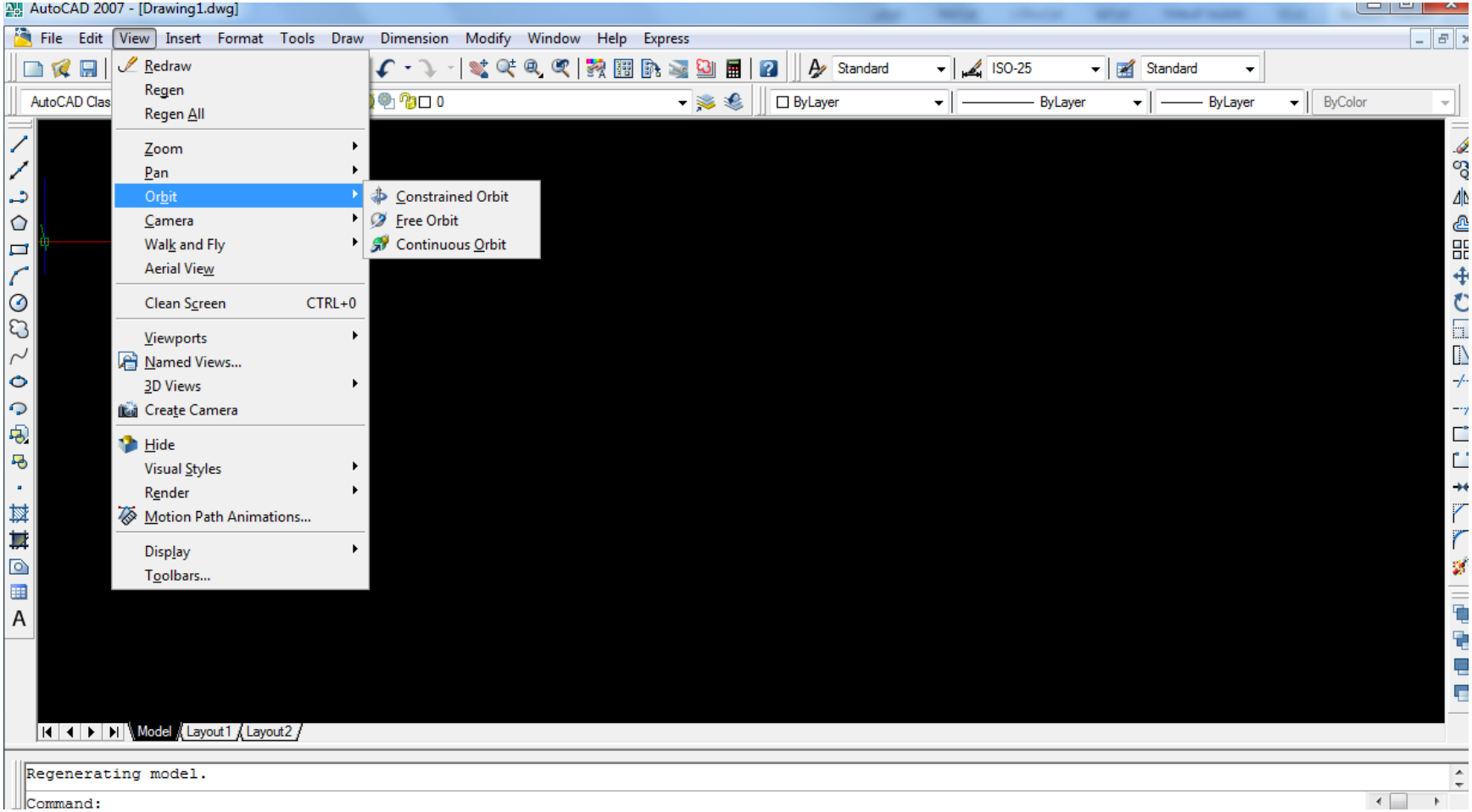

There are three options

- 1- constrained orbit this tool allows you to move the model freely in any direction by pressing as it continues the left button of the mouse
- 2-free orbit this animation allows you to rotate the form within the drawing screen in afree and manual way

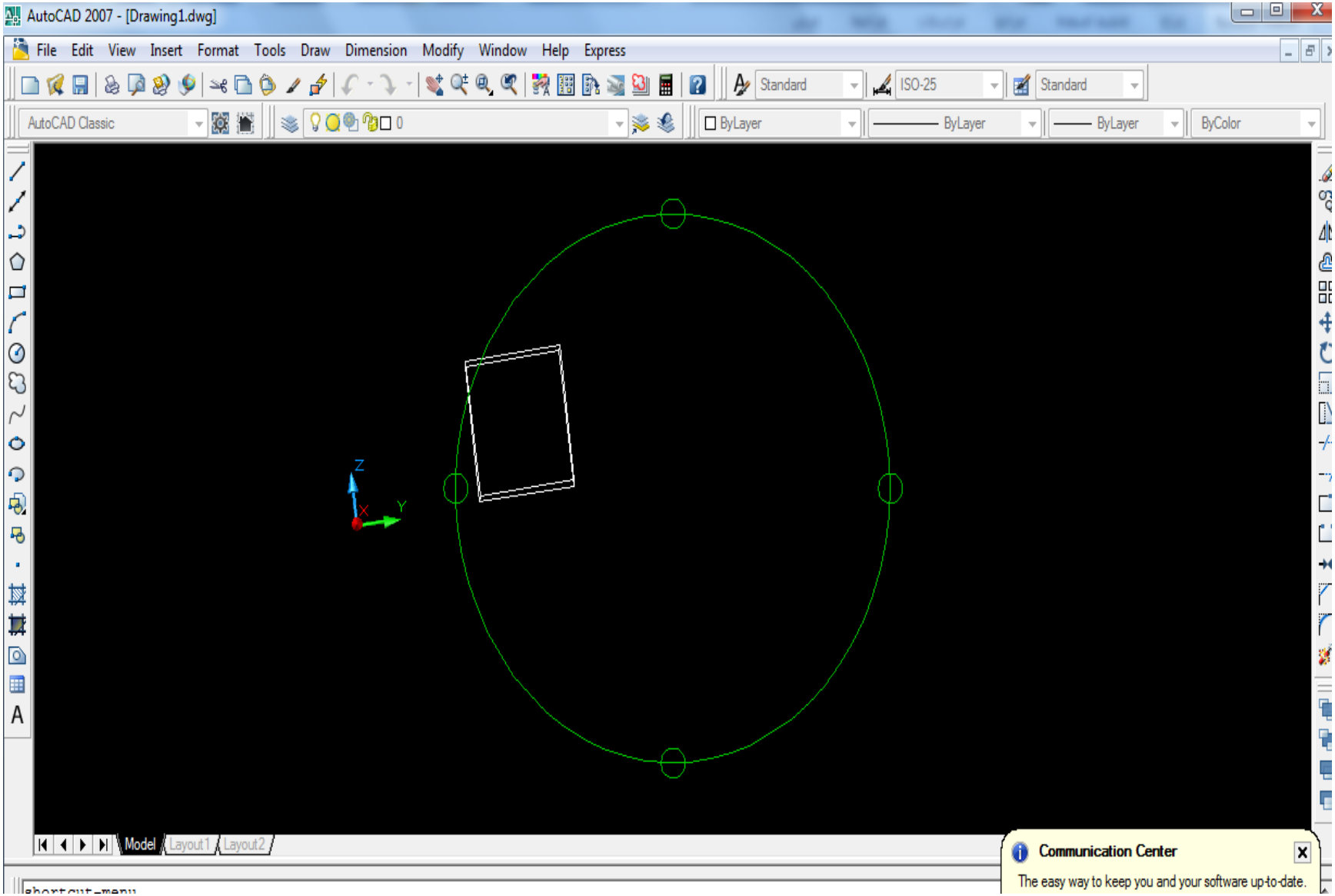
AutoCAD 2007 - [Drawing1.dwg]
File Edit View Insert Format Tools Draw Dimension Modify Window Help Express
Standard
ISO-25
Standard
AutoCAD Classic
0
ByLayer
ByLayer
ByLayer
ByColor
Z
Y
X
Model
Layout1
Layout2
Communication Center
The easy way to keep you and your software up-to-date.

3-continuous orbit this animation allows you model to be rotate continuously by pressing the left mouse button continuously with stirring and then escaping

There is adirect way to shift the drawing from 2D to 3D and that is done by the bar is located in the left hand side of the screen and we open it and choose 3D modeling

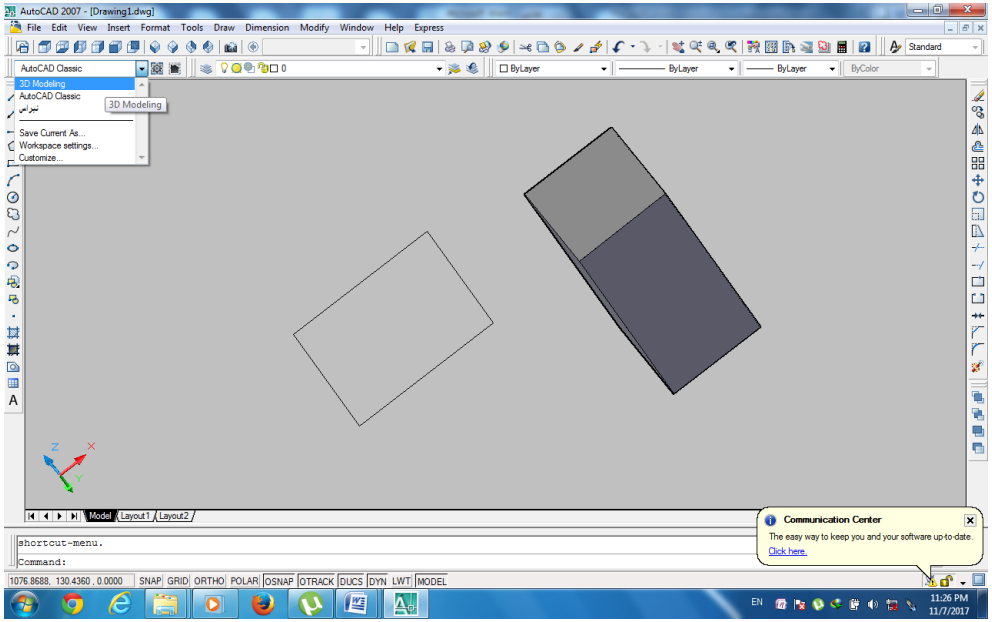

You will notice a change in the shape of the drawing screen

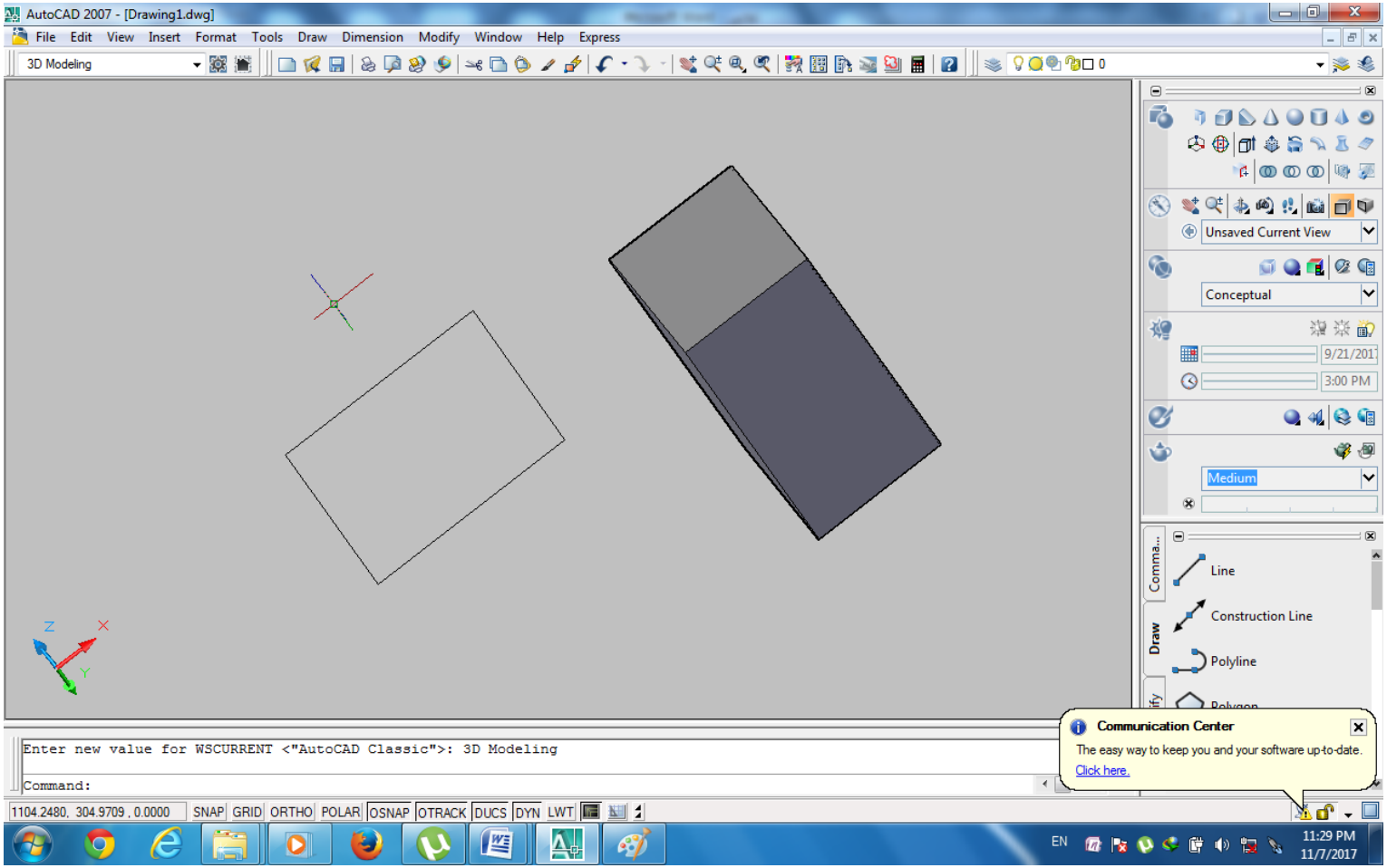

Coping with the coordinate system Ucs
When we do this we notice

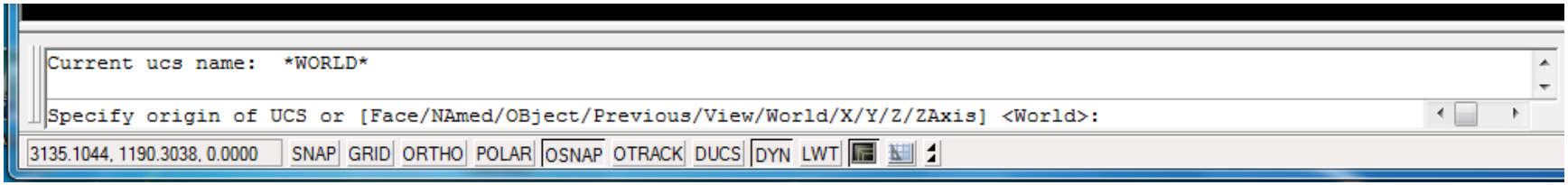

You will notice the emergence of a set of secondary commands which are:-

1-face → F

When choose

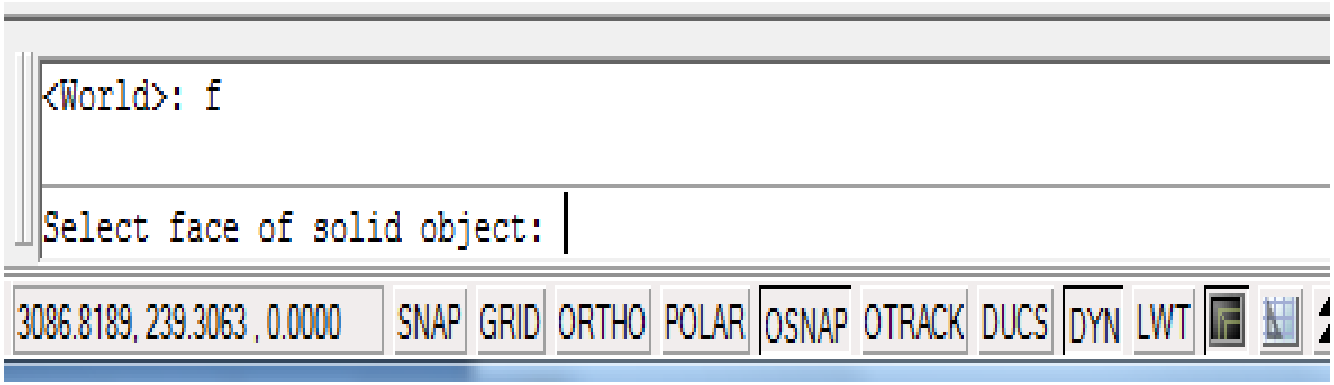

Which requires the identification of the face required to draw it so that it becomes parallel to the level of X, Y

EX:- let us have the following form

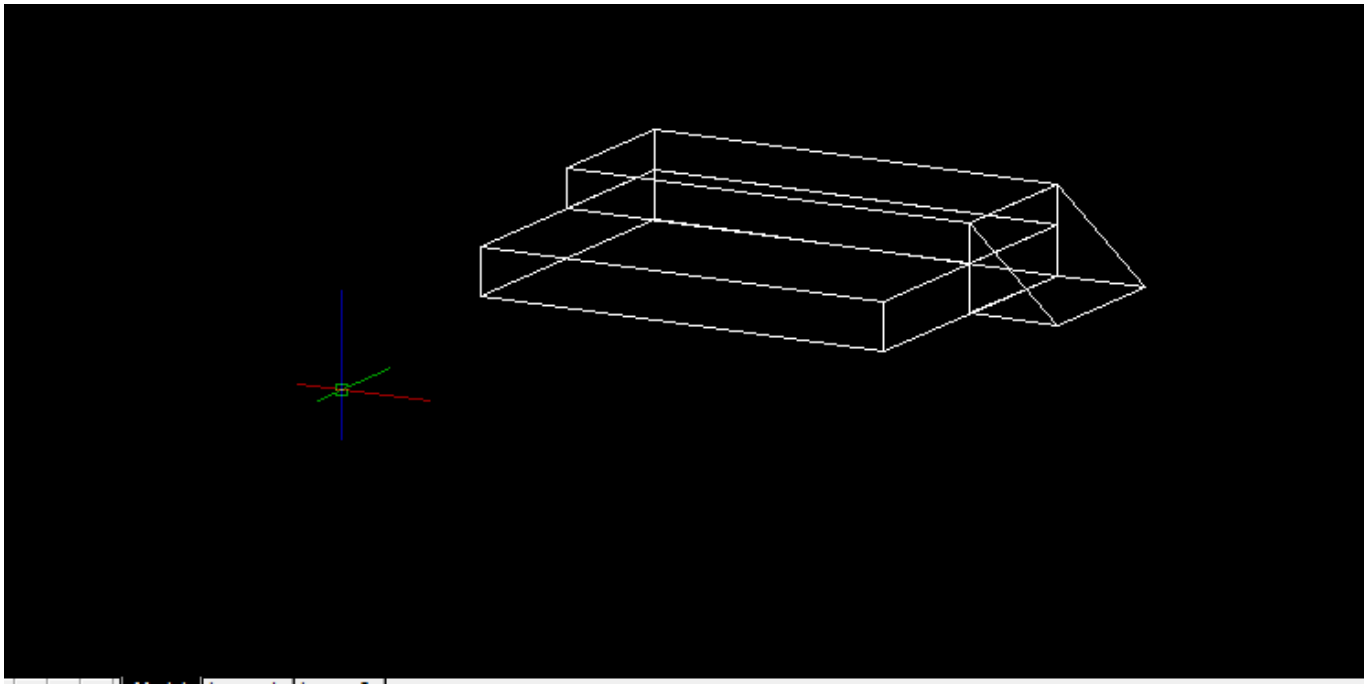

When choose command face for the slanted face

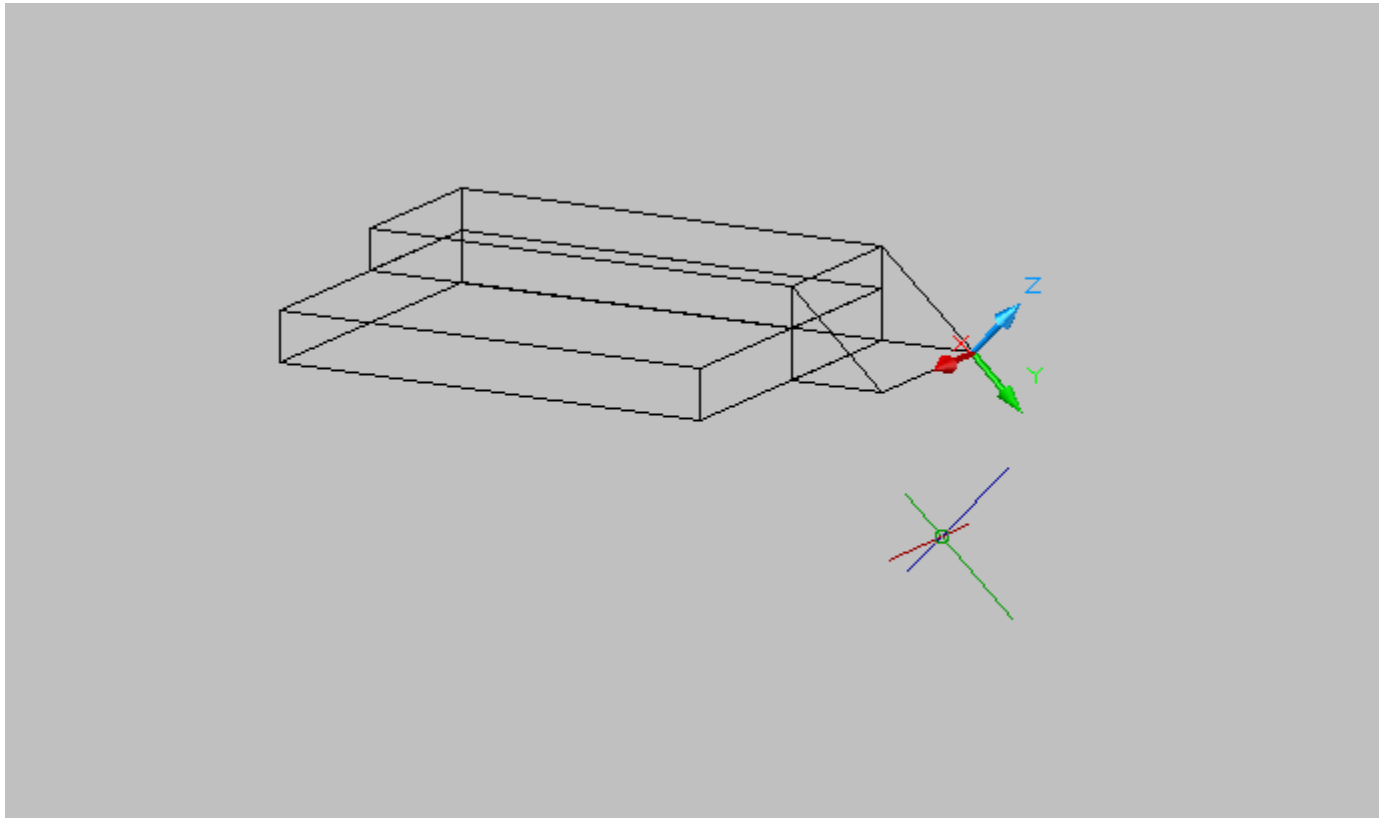

becomes parallel to the level of X, Y

2-command named → NA

When choose

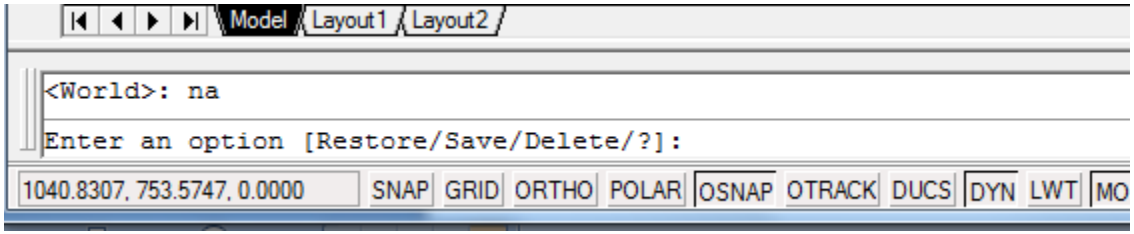

Secondary command

Save :- this allows you to save the coordinate system Ucs to call him when needed

Delete :-this allows you to delete system stock previously

Restore :- this allows you to restore stock system previously

- **3-command Object OB**
- **يستخدم هذا الامر**
- **لتعريف نظام احداثي جديد عن طريق رسم عنصر ثلاثي الابعاد**
- **٤- الامرPrevious واختصارهP يقوم باستعادة نظام احداثيات سابق**
- **View واختصارة V يسمح هذا الامر بتحيد نظام الاحداثيات الجديد ويجعلة مقابل للشاشة 5الامر**
-
- **حيث يصبح المحور X موجبا وموازيا لاسفل الشاشة والمحورY**
- **يصبح موجبا وموازيا للطرف الشاشة الايسر اما النقطة ٠,٠ فتبقى في مكاننها الحالي**

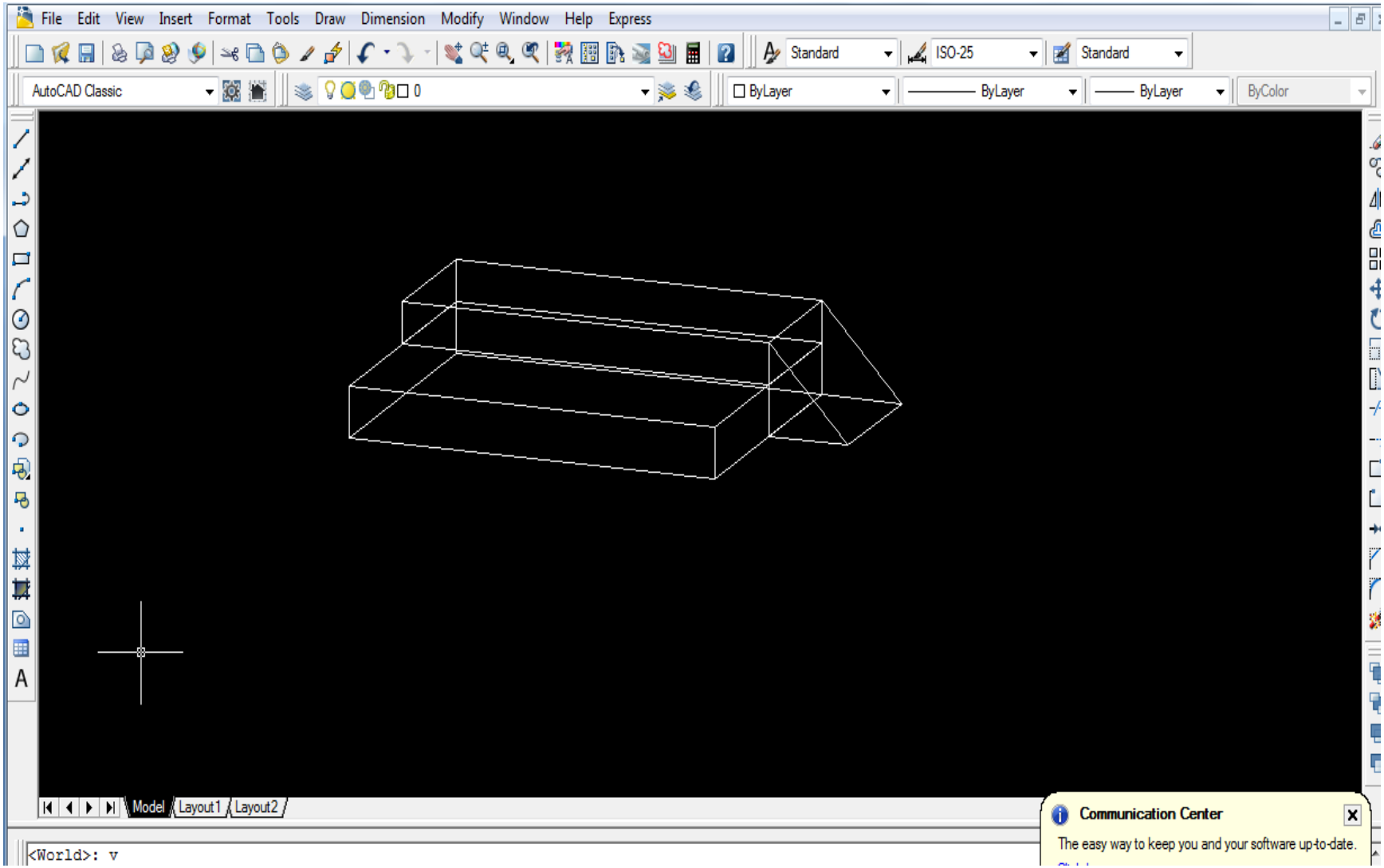
File Edit View Insert Format Tools Draw Dimension Modify Window Help Express
Standard
ISO-25
Standard
AutoCAD Classic
0
ByLayer
ByLayer
ByLayer
ByColor
Model
Layout1
Layout2
Communication Center
The easy way to keep you and your software up-to-date.
<World>: v